PROYECTO DE INFORMACION AGROPECUARIA DEL ISTMO CENTROAMERICANO

–PIADIC–

FINAL REPORT

PROJECT 596–0045

JANUARY 1984
SAN JOSE–COSTA RICA

IICA
INTER–AMERICAN INSTITUTE FOR COOPERATION ON AGRICULTUR
INTER–AMERICAN AGRICULTURAL INFORMATION AND DOCUMENTATION CENTER (CIDIA

P I A D I C

PROYECTO DE INFORMACION AGROPECUARIA DEL ISTMO CENTROAMERICANO*

F I N A L R E P O R T

January 1984

* PIADIC is the acronym for the title, in Spanish, of the Agricultural Research and Information System project.

CONTENTS

INTRODUCTION AND GENERAL INFORMATION.

On June 30 1983 the Agricultural Research and Information System- Project 596 0048- known in Central America as Proyecto de Informacion Agropecuaria del Istmo Centroamericano - PIADIC - terminated 8 years of valuable and innovative activities to improve the collection, management, and use of agricultural information in the region.

During the life of the project it went through at least three distinct phases:

1975-1978 the promotional and implementation phase.
1979-1981 the operational and execution phase.
1981-1983 the geographical and numerical information system development and installation phase.

The promotional and implementation phase has already been reported on earlier as this phase constituted the original project. It may, however, be useful to recapitulate very briefly this phase to establish continuity for understanding the subsequent phases so the project can be seen and understood in its totality.

Early PIADIC efforts focused on obtaining the cooperation of key national and regional institutions involved in rural development and information management. In-depth surveys to determine the state of information management and availability were conducted in each country of the region, and national priorities were established in response to survey results to aide in the formulation of national plans for national agricultural information systems. Special projects were also designed to accommodate national and institutional requirements, and inter-institutional agreements were drafted to facilitate acquiring, and transferring agricultural information. During this same period, national technicians were being trained as a step toward implementing the proposed national systems. On this important base rested the following phases.

The two following phases were developed as a separate project but were a continuation of the original project. In the new project, when it was approved in 1979, various changes were made based on experiences gained during the execution of the previous phase. The changes made were not changes of substance in terms of objectives or philosophy but rather changes in approach and strategy.

When field work began in 1979 it was with the original aim of creating national level integrated information systems that could: (1) identify information needs; (2) collect, manage, and analyze information; from (3) the agricultural/rural sector in general and the farm population in particular; and (4) deliver reliable and timely information; to (5) planners, decision makers, and researchers. This system would serve many purposes, but the requirements of planners and researchers were to receive special attention and to have paramount importance in the design of the system, in its format, and in its method of data handling and storage.

In July 1981 when the second and major phase of the project had terminated all its main activities in the field, each one of the programmed activities published detailed reports outlining experiences and results as well as recommendations for new and future projects hopefully to be developed and executed.(see Annex 1-Bibliography.)

For the above reasons this report will only present a very general summary of the project, its execution and results, so a unified view of the project can be gained.

The stated objective for the project during all its phases was to improve the collection, analysis, and use of relevant small farm data on which improved research and planning action could be taken nationally and regionally in Central America.

The geographical area served by the project was Central America. Initially the countries covered were Guatemala, Honduras, El Salvador, Nicaragua, and Costa Rica. In early 1976, Panama having observed the project and taken cognizance of the potential benefits to the country, also joined the project. So from 1976 on, all six countries on the Central American Isthmus were participants.

The Central American Agricultural Research and Information System project was financed by the Regional Office for Central American Programs (ROCAP) on behalf of the Agency for International Development (AID) with a grant of $ 3.397.000. The Inter-American Institute for Cooperation on Agriculture (IICA) contributed with at least $ 1.250.000. In addition it is expected that national and regional participating institutions contributed with at least $ 2oo.ooo. In total the project expended approximately $ 4.847.000 during its life time.

The executor and administrator of the project was the Inter-American Institute for Cooperation on Agriculture (IICA). During its first phase the project was handled by IICA as a special project in Information. However, because of difficulties experienced integrating and coordinating project activities with the information activities carried out by the Inter-American Center for Agricultural Information and Documentation (CIDIA) as part of IICA's general information program, it was decided that from the second phase on, the project would be integrated into CIDIA and all project activities be integrated, coordinated, and executed as part of the general information program. Thus from 1979 the project functioned as a division of CIDIA and the project coordinator was a division head responsible to the director of CIDIA.

Project personnel consisted of (1) technicians from USDA seconded to the project under PASA agreement, (2) technicians from Central America hired by the project, and (3) IICA technicians seconded to the project. Figures for manpower utilization expressed in person/month exist only for the second phase. At the termination of phase two on June 30, 1981 the figures were as follows:

(1)	PASA full-time	74.0 P/M.	Contract requirement	80.5 P/M.
(1)	PASA part-time	15.0 P/M.	Contract requirement	22.0 P/M.
(2)	CA.T full-time	167.0 P/M.	Contract requirement	188.0 P/M.
(3)	IICA full-time	88.5 P/M.	Contract requirement	135.0 P/M.
(3)	IICA part-time	70.5 P/M.	Contract requirement	84.0 P/M.

As phase three was carried out almost entirely by IICA personnel with some support by consultants covered under the PASA agreement, it is estimated that at the termination of the PIADIC project in June 1983 all personnel requirements as specified by the contract were fulfilled.

OPERATIONAL ACTIVITIES.

To obtain the stated objective of the project four main activities were designed:

(1) Rural Sector Statistics--Area Frame Development Assistance.
(2) Data Bases Development and Use Assistance.
(3) Information Centres and Interchange System Development Assistance.
(4) IICA and Regional Organizational Capability to provide Technical Assistance and Coordination for Central American National and Regional Information Systems.

At project execution level the project was divided into five operational activities to facilitate administration and execution. The Data Base Development and Use Assistance activity was divided into two operational activities. One activity was directed towards data base development and the other activity was to address use assistance. For project purposes " use assistance" became the activity that was to develop area profiles and production alternatives. The report will explain these concepts in more detail later.

The project was thus executed along the following five operational activities during phases two and three:

(1) Development and refinement of area sample frame.
(2a) Structuring of agricultural research and planning data bases.
(2b) Rural area specific profiles and recommendations for production alternatives.
(3) Establishment of specialized agricultural data and information centres.
(4) Project administration and coordination. Institutionalization of project methodology.

The following sections will present in detail the execution of each one of the operational activities. For each activity will be indicated "expected outputs or end of project status". All outputs at country level will be shown and some general comments will be made about the activity in general and to elucidate special problems or special actions taken.

Operational activity 1. Development and refinement of area sample frame.

End of project status: (1) Six countries are using the area frame in a planned program of data collection. (2) 200 technicians have received training in a planned program of data collection, handling, and use. (3) Data collected by use of sample frame are being utilized in research design support, planning, determining production and marketing problems, and evaluation of development assistance effectiveness.

Guatemala. The frame has been constructed and it is operational in region 1. Two surveys were conducted during 1979-80. At the end of phase two in June 1981 work was progressing

well in regions 4-6-7, and it was expected that the frame would be operational by the end of 1981. Surveys were planned for regions 1 and 7 during December 1981 and in 1982 surveys were programmed for regions 1-4-6-7. Unfortunately due to the political situation and lack of funds it has not been possible for national institutions to carry out all the activities programmed after the end of PIADIC phase two. In regions 2 and 5 the frame is virtually completed. The project did not work in those two regions as the frame construction was under contract to a private contractor. In 1980 region 2 was subdivided into two regions and region 8 - Franja Transversal del Norte - was created. It was contemplated to construct a sample frame to be used for special surveys for region 8 but for major agricultural surveys region 8 would be included into region 2. Because of the sparse population density and extremely low agricultural production it was decided not to construct an area frame in region 3. It was expected to have had the national area frame operational by 1985.

In addition to technical assistance PIADIC financed the preparation of three software packages specially designed for Guatemala; but applicable in other countries, for survey tabulations and editing of results.

One of the most pressing problems experienced during this time period was to gain access to a computer for tabulation and analysis of results. In early 1981 an agreement was reached with Direccion General de Estadisticas in Guatemala that this institution would process data but not on a priority basis. The software package employed was SPSS.

The cooperating national institution was Unidad Sectorial de Planificacion Agricola (USPA) now called Unidad Sectorial de Planificacion Agricola y de Alimentacion (USPADA).

During courses, seminars, and technical assistance missions at least 135 participants were receiving training.

Approximately 95 days were spent by project technicians in Guatemala executing this activity.

El Salvador. It should be pointed out that the PIADIC project did not start from zero with the introduction of the area frame in Central America. Work had previously been carried out by USDA in El Salvador introducing the area frame. Since 1976 the area frame had been operational in El Salvador and three major agricultural surveys were carried out per year. Up until late 1979 the PIADIC project gave technical assistance to all area frame activities. When political violence erupted in this country it became impossible to carry out technical assistance missions which included field work and field supervision. The project's Central American specialist in area frame construction was a resident of El Salvador, thus technical assistance was offered in all matters relating to data collection and processing.

The national cooperating institution in El Salvador was Direccion de Economia Agropecuaria.

No exact figures exist for technician days spent in this country. At least 9 technicians participated in courses given outside of El Salvador.

Honduras. In Honduras the area frame for region 1 has been constructed and the sample has been established. In regions 2 and

3 the work was 80% completed. When regions 1-2-3 are completed the area frame will cover 40% of the national territory and about 60% of agricultural production.

In 1982 the Government of Honduras approved a loan from AID Honduras to conduct and terminate area frame construction in the remaining 4 regions of the country.

The cooperating national institution was Secretaria de Recursos Naturales Renovables. Office space was furnished by Direccion General de Estadisticas y Censos, and personnel was provided by SRNR.

35 national technicians received training and 50 project technicians days were spent in Honduras.

Nicaragua. The area frame has been constructed for the Pacific region of Nicaragua. This portion of the country represents about 90% of the agricultural production. Since May 1978 surveys utilizing the area frame have been conducted, and three multi-purpose agricultural surveys have been performed . The Government plans to expand and increase the sample to provide departamental estimates and use the frame to provide basic agricultural data instead of carrying out agricultural census.

Instituto Nicaraguense de Estadisticas y Censos (INEC) was the cooperating national institution

80 national technicians received training and 90 technicians days were spent in Nicaragua.

Costa Rica. The area frame has been completed for all of Costa Rica, and the sample has been drawn. A pilot survey was conducted in the Central Pacific Region in 1978 and the results published in 1979. A national livestock survey took place in 1981.

A system of two multi-purpose surveys a year was programmed for the future, but for lack of funding for the activity this has not been possible.

The national cooperating institution was Secretaria Ejecutiva de Planificacion Sectorial Agricola (SEPSA).

65 national technicians received training and at least 108 technicians days were spent in Costa Rica. This number does not include the days spent working with SEPSA by the resident area frame specialist stationed permanently in the country.

Panama. Neither in Panama did the project start from bare ground in area frame work. Since 1963 Panama has had an operational area frame. The area frame has been developed from census cartography using census segment. The methodology employed by Panama was not the methodology recommended by the project but no efforts were made to try to introduce a new area frame based on aerial photography. Thus the project offered mainly technical assistance in questionnaire design and data processing. The PIADIC project provided the computer centre at Direccion General de Estadistica y Censos with the SAS software package to analyze and summarize data.

Cooperating national institution was Direccion General de Estadistica y Censos.

20 national technicians were trained and 30 technician days were spent in Panama.

Summary. The strategy used in each country was to offer a two week course in sampling theory and frame construction, a one week course in objective yield procedures for corn, and a one week

data user seminar. Technical assistance was then used for training and to carry out field work and exercises.

Counting the final wrap-up regional area frame and survey operations seminar 344 technicians participated in this activity. At least 373 technicians days were spent in the countries.

The activity was coordinated and executed by Mr. Montie Wallace assigned to the project under a PASA contract for the duration of phases one and two. Mr Roberto Alvarado served as assistant for 15 months.

The institutionalization of the area frame on regional level was progressing well during the life time of the project. All national efforts to maintain the area frame was almost exclusively funded by local national AID missions and it appeared that such support would continue.

Institutionalization of this activity within IICA did not take place. IICA did not feel that it could develop sufficient expertise during the life time of the project to offer high level technical assistance so as to continue this activity beyond the end of PIADIC. A gentlemen's agreement was reached between ROCAP and IICA to this effect. In consequence an assessment of needs for technical assistance to the nascent national area frame operations was carried out by a team of experts for presentation to AID.

Operational activity 2a. Structuring of agricultural research and planning data bases.

Expected outputs or end of project status: (1) Standardized methodologies have been developed and/or being used by researchers in the six countries for systematically improving priority data bases. (2) Supportive data bases in soils, climate, production, marketing, and socio-economics have been improved and made more useful for research, planning, packaging, and making analogies.

The fundamental purpose of this activity was to create the mechanisms necessary to manage and analyze the information needed for the following activity namely the elaboration of area profiles and production alternatives. The original concept was to create at regional and national level an integrated and unified information system where all information would be available from one source. It became clear that although the idea was technically possible it would be operationally and politically impossible to establish such a system, and the idea was abandoned beginning with phase two. The system concept at the national level now consisted of a series of specialized, but coordinated, data bases in various locations, managed by responsible institutions. The basic strategy was to avoid the establishment of big bureaucratic monolithic organizations where all information might be gathered and stored in one central data base. Unification would be achieved by cooperative agreements between national institutions and the application of compatible formats in data base design and retrieval methodology.

For simplicity, the mass of information needed by the agricultural sector was divided into two classification systems: one containing all scientific and technical information and the other containing all socio-economic information. Each system was then subdivided into two macro-descriptors. Within the

scientific/technical system, the macro-descriptor "Natural Determinants" included soils, climate, and other natural resource information, while " Technical Determinants" covered research information, germplasm, production methodology, and plant and animal protection information. The socio-economic system was divided into " Intrinsic Socio-Economic Determinants" which included information about the rural family unit, use of resources, applied production methodology, and level of life information; and " Extrinsic Socio-Economic Determinants", which covered basic services, credit, extension services, health services, education, business, prices, and infrastructure.

This division of information, however artificial, made it easier to visualize and explain the organization of data bases and administrative structures. In the same manner and for the same reasons, the flow of information was divided into a series of interrelated phases and each phase was treated as a separate objective. The three main phases were:

Phase 1- "Input" which treated acquisition, description of variables, coverage, and timeliness of information flow.

Phase 2- " Storage", which dealt with problems of classification, analysis, transcription, data processing, and data base creation.

Phase 3- "Usage", which addressed retrieval and delivery of information, as well as all aspects of providing and establishing services to users.

The area frame sampling methods and general survey, and traditional library practices were selected, and appropriate manuals and explanations were prepared as a part of phase 1.

For storing and managing data, it became necessary for the first time to consider numerical and documentary data as two distinctly different types of data requiring different methodologies. It was decided that "Natural Determinants" information should be presented in map form. As a result, processing and management packages had to be developed for:

- Statistical information.
- Natural resource information.
- Documentary information.

For statistical information, the SAS software package was chosen, because it is a very powerful and versatile package. Unfortunately, there were only a few computer installations in Central America capable of mounting SAS, thus the SPSS package was chosen as an alternative for smaller installations. SPSS can be controlled by SAS, so as computers are upgraded to handle SAS, all work on SPSS would not be lost.

To store "Natural Determinants", the CRIES geographical information system was selected. This system was developed by USDA and the University of Michigan.. The CRIES system is based on a grid system and information is presented in map form.

To handle documentary information, the project required both an automated computerized system and a manually operated system. At this time micro computers were as yet not available. The automated system would operate on national level and the manual system would be used at institutional level. Fortunately, IICA-CIDIA had previously developed a software package to handle bibliographical information for its hemispheric agricultural

information system, AGRINTER. The AGRINTER is the regional subsystem of the world agricultural information system AGRIS operated by FAO. There were two problems with the AGRINTER software. It was a rather large system to install and it was unsuited for handling the type of information required for current research inventories, germplasm information, and inventories of researchers. Thus the ISIS software was chosen as a supplement and alternative to AGRINTER. The ISIS system was developed by ILO but maintained and distributed by UNESCO.

To handle the manually operated system at institutional level, the optical coincidence system was chosen, with the UNITERM system as an alternative.

To manage the information for the system dictionaries of variables were developed for the various macrodescriptors and their subdivisions. These dictionaries were developed by subject specialists in each area. For each country a geographical dictionary was developed indicating internal political boundaries. All subject and geographical dictionaries were using a common design and lay-out.

For the "Usage" phase of information flow, procedures for selective dissemination of information profile writing were established, along with general library user services.

For various reasons it became clear early during phase two that it would be very difficult to syncronize the development of the necessary data bases and have them installed at national level to coincide in time with the needs for information handling and analysis expected by the area profile and production alternative activity. One of the problems was the weak infrastructure for computerized information handling at national level and the shortage of trained personnel. For this reason it was decided when necessary to use the IICA computer installation to process data from area profiling activities in the countries but to use data processing personnel from the countries. It was also decided to start a series of training seminars and in service training at IICA computer centre to familiarize national technicians with the different programmes and their utility, as well as data base management and administration of computer centres. It was not only at national level that training was necessary, CIDIA and its computer staff also needed time to learn how to handle the new programmes and to install them on the in-house computer. The impact of the new systems and the new possibilities, on the thinking and outlook of the computer centre was profound.

It was the operational activity" Structuring of Agricultural Research and Planning Data Bases" that continued as phase three of the PIADIC project until June 30 1983.

As mentioned above the SAS software was chosen to manage and analyze numerical data. Few problems were experienced at IICA computer centre installing and applying the package. Seminars and technical assistance were carried out in the countries. Only in Panama did the project install the package where it is now being used by Contraloria General de Panama. In the other countries assistance was given in using SPSS. SAS/SPSS was used to create data bases for Costa Rica (at IICA), Nicaragua (at IICA), Guatemala (in Guatemala), and Panama (in Panama).

The total number of technicians trained in SAS/SPSS by the project was 56.

During phase two the project began to create a regional socio-economic data base, however, the data base was developed mainly during phase three. Approximately 80 variables were chosen for each country and time series back to 1960 were established. The data base contains information on population, balance of payment, trade, gross national product, import and export by product, production, productivity, and many others. Sources for the information were official national documents. When CORECA was established the project expressed interest in developing the data base further and the Dominican Republic was included. At the present time the CORECA project is fully responsible for the maintenance of the data base and it is now known as the CORECA Regional Socio-Economic Data Base. The SAS software program was utilized for the construction.

In December 1982 the Economic and Social Data Services (ESDS) was brought to the attention of the project. ESDS is a computerized statistical information service for AID. Drawing on automated data bases in the the World Bank, International Monetary Fund, the U.S. Department of Agriculture and other institutions, the service can research information on most countries in the world. These automated data bases provide national level statistics on topics such as national accounts, balance of payment, trade, government finance, agricultural production, demography, nutrition, health, education and more. The service was of interest to IICA for two reasons. If this data base could be acquired by IICA and installed in its computer it would afford IICA the opportunity to begin to offer statistical analysis services to its member countries and to satisfy its own institutional needs. The installation would also serve as a magnificient first step in IICA's recently approved " Hemispheric Numerical Information System for Rural Development". This project was developed in response to a request by member countries that such a system was needed to monitor agricultural development in the Hemisphere.

During the preparation of the project a work group consisting of directors of national agricultural statistical information systems, was established to analize the project and to ensure greater national input. Throughout the meetings of the work group it was indicated that the first priority should be to find a way to integrate and dovetail existing market information systems into the Hemispheric System. The existing systems could be coordinated by the project and then new systems developed throughout the Hemisphere.

IICA and the Board of the Cartagena Agreement have signed a general agreement for cooperation. It allows for a specific accord to be signed for interacting with the Agricultural Commercial Information System (SICA) operated by the Cartagena Agreement. Similarly, IICA and Secretaria de Integracion Economica Centroamericana (SIECA) have an agreement for interacting with the Agricultural Commercial Information System for Central America and the Dominican Republic.

If activities were coordinated with OICD for the Agricultural Commercial Information System in the Caribbean Basin, a system of

nearly hemispheric scope could soon be operating for agricultural commercial information. This would facilitate the incorporation of remaining countries into the system, in response to one of the major needs identified.

In addition to the information obtained from ESDS, IICA would establish an information gathering network to collect some necessary variables not available from ESDS. Because the ESDS system is using the SAS software package for its data base all information could be integrated and exchanged without difficulties.

An agreement was reached between IICA and the Economic and Social Data Services Division of AID to install the system in IICA and in May 1983 the installation was completed. The remaining of the year was used to acquaint CIDIA staff with the content and operation of the system. The system was also installed at CATIE and all Central American information was transferred at that occasion.

With the acquisition of this system, the approval of the new project, the existence of the hemispheric agricultural bibliographical information system AGRINTER, and IICA's general administrative needs it became imperative to obtain a more powerful and modern computer. In consequence a contract was signed to purchase a new computer configuration. Also it was decided to equip IICA national offices with micro computers connected by telecommunication.

As can be seen the seed planted and nurtured by the PIADIC project has grown strong. It is difficult to visualize this great development and expansion of IICA's information programme without the existence of the PIADIC project and the expertise generated by the project in IICA to manage such a programme.

To store and manage "Natural Determinants" the CRIES software package developed by USDA and the University of Michigan was introduced. Through a PASA agreement a consultant was hired and the system was sucessfully installed.

The first task to accomplish was to establish the grid system for the Central American Isthmus and then to enter nationally specific information. From December 1981 on, the PIADIC project received financial support from AID Project No. 598-0605. Development of a Central American and Panama Basic CRIES System.

By the end of the project the following maps had been entered into the system:

For all Central American countries.

1- Average annual temperature.
2- Average annual rainfall.
3- Average annual evapotranspiration.
4- National and international political boundaries.
5- Ecological life zones.
6- Population density.
7- Actual land use.
8- Duration of dry season
9- Average monthly rainfall.

Costa Rica.

1- soils -sub groups.
2- principal water sheds

Nicaragua and Honduras.

1- soils -sub groups.

After the termination of the PIADIC project soils maps for all countries were produced. In addition special maps were produced for Ministerio de Agricultura y Ganaderia de Costa Rica for reforestation projects as well as maps were produced to identify areas in Costa Rica suitable for production of certain crops.

The project sucessfully installed the CRIES system at the National University in Nicaragua for the use of MIDINRA. As part of the installation all national information available on Nicaragua was transferred to this installation. In Costa Rica the system was installed at CATIE's computer and all information was transferred. One of the expected uses of the system was to begin experiments of extrapolation of area information. During phase two of the project a preliminary version of CRIES had been installed in the computer at Instituto Tecnologico de Costa Rica as part of another project. This project did not receive the expected funding and the project was abandoned. At this point PIADIC provided the needed technical assistance to up-date and maintain the system and the total system is now functioning at ITCR.

In Honduras the project cooperated with AID Honduras in installing the system at the computer installation at COHDEFOR. Also in this case was all Hondurenean information transferred to Honduras.

The system was not installed in Guatemala as a similar geographic information system had been installed by the University of Iowa as part of a project with Instituto de Fomento Municipal (INFOM).

In Panama a geographic information system was under consideration but no decision was taken and the project did not install CRIES.

Seminars and technical assistance was offered and 20 national technicians received training.

Already during the first phase of the project was contact made with UNESCO to install the software package ISIS at the IICA computer. UNESCO gave technical assistance and appropriate manuals were received and IICA personnel was trained in Paris. Unfortunately it was not until May 1981 that the package was received and installed. At that point in time it was too late to apply the software in the countries in support of project activities.

In anticipation of receiving the package and based on manuals the project had already prepared systems for (1) inventory of current research, (2) inventory of research workers, and (3) germplasm. When the package was finally operational it proved that changes had been made to ISIS and the project would have to redo its work on the systems.

In 1982 the systems were again ready and as a pilot project it was decided to inventory all coffee research in Central America. This project was executed in cooperation with the PROMECAFE project. About 250 projects were inventoried. The data base is now being maintained by PROMECAFE.

As of this writing the package is being installed at the Universidad Autonoma de Honduras for use by the national

agricultural information system coordinated by SRNR. In Honduras the system will serve mainly to offer Selective Dissemination of Information (SDI), but current research inventory will also take place. The installation is carried out as an activity of IICA's general information programme.

The system for germplasm was developed by CATIE and the system is operational at that institution. This system has as yet not been transferred to any Central American country.

Mention should be made that the project in 1980 at the request of the CORECA project produced an inventory of research personnel in Central America. As ISIS was not available the project used the SAS software. The package is not suited for this purpose but in an emergency it can be applied. Approximately 3000 research workers were entered into the inventory.

Summary. In terms of expected outputs the project created all the necessary data bases, and manuals for operation and use were prepared. The different software packages were not installed in all countries, but they were installed whenever a country expressed interest. The process is still going on as the activity is part of IICA's general information programme.

Operational activity 2b. Rural area profiles and recommendations for production alternatives.

Expected outputs or end of project status: Twelve area specific profiles of information and first approximation recommendations for crop production in specific areas have been developed by national agencies and are being tested, verified or modified by researchers and farmers.

In operational terms this activity was the central activity of the whole project. In this activity the project would prove the utility of the various data bases and their use in a real life situation.

Undoubtedly this activity was the most controversial part of the project. The controversy arose not so much about the information management part of the project as there was general agreement that information was needed and that it should be handled efficiently. The controversy arose during the first phase of the project about the definition of what at that time was called " tech packs ". A " tech pack" was originally conceived to be a proven production methodology for a given crop to be adapted to a specific locality taking into consideration local conditions. Several work shops and seminars were held to analyze the concept and towards the end of phase one of the project it was determined that it would be preferable to change the concept to first approximation production alternatives. From phase two on the concept became an intellectual exercise in which all current research material available on a specific crop would be analyzed by experts. All environmental and socio-economic data relating to the specific area in which the crop was considered for production was also made available to the experts and based on the total information package a possible production method would be developed. It was this possible production methodology that was called the first approximation production alternative. The production alternative would then have to be field tested by researchers and farmers, and modifications made where indicated. This final field testing was not to be part of the project as it

would take place at a later time.

As the title of the activity indicates it contained two parts of which the alternative production methodology has already been described. The other part of the activity was area profiling.

Rural area profiling is a process that allows systematic assessment and analysis of agricultural production and associated social and environmental factors. The public service sector of a region or country can use these diagnostic tools to plan, implement, control, and evaluate development policies. Profiling is basically an aid to decision making, much like the medical doctor's process of examining a patient, making a diagnosis, and maintaining a medical history. Given the data from initial area profiling investigations, plus additional data from later monitoring, a case history (data base) can be developed that provides a very comprehensive picture of the "health" of an area and serves as a basis for further recommendations and treatment.

In general terms, rural area profiling can be defined as a continuing process to more efficiently identify, organize, and manage the resources of a specific rural area.

Guatemala. In September 1980 agreement was reached with DIGESA to carry out profiling work in the Altiplano Central and Occidental. Two area profiles were constructed: one for Departamento de Quetzaltenango and one for Departamento de Chimaltenango. For Quetzaltenango alternative production packages were developed for the cultivation of potatoes, cabbage, and peaches. For Chimaltenango alternative production packages were prepared for potatoes, strawberries, and cabbage.

In addition to technicians from DIGESA participated technicians from BANDESA, DECA, INAFOR, and INTA. In total participated 22 Guatemalan technicians in this exercise. From the project participated 6 technicians. At national level the activity was coordinated by Lic. Marco Tulio Guillen and the project was represented by Dr. Raul Soikes.

The project had earlier in the year reached an agreement with USPA to carry out profiling work in Sector Ixcan in the Franja Transversal del Norte. Due to the political situation developing in this area the work initiated was abandoned in May 1980.

El Salvador. Work in this activity was progressing well until September 1979 when the political situation became so serious that activities had to be halted. Agreement had been reached to work in Zona Norte and all work plans had been elaborated and agreed upon. In El Salvador CATIE would have been cooperating in the activity. It did not become possible to continue and consequently no area profiles nor alternative production packages were developed by the project. In preparation for the work 20 national technicians received training. After the termination of phase two, area profiling was carried out in this country and alternative production packages formulated and they are in the process of being field tested.

Honduras. As part of the national development plan in Honduras Direccion Agricola Regional Norte requested the project to carry out profile work in the valleys Yoro, Yorita, Sulaco, and Victoria. Four area profiles were elaborated and four alternative production packages were developed. The packages were for corn, bean, coffee, and animal production. For training purposes other

Direcciones Regionales sent technicians to participate in the activity. In total 45 national technicians received training. The activity was coordinated at project level by Lic. C. Alvarez.

Nicaragua. On two occasions did the project carry out profiling work in Nicaragua. In early 1980 Instituto Nicaraguense de Reforma Agraria (INRA) requested project support to carry out profile work at Complejo " Ivan Montenegro" and to prepare production plans for corn, sorghum, ajonjoli, higuerilla, and plantain. This work was completed. 19 national technicians participated. Lic. E. Marin coordinated on behalf of the project.

On the second occasion PROCAMPO requested support to profile the areas of Siuna, San Carlos, Nueva Segovia, and Bocana de Paiwas. The four profiles were executed and production alternatives were developed for coffee, cacao, rice, corn, and beans. 100 technicians participated. The national coordinator was Holman Jose Pineda B. and Dr. J. Roman coordinated for the project.

The methodology has since been applied in Nicaragua by PROCAMPO as standard procedure for field surveys.

Costa Rica. Also in Costa Rica did the project carry out profiling work on two occasions. In 1979 as a training exercise in preparation for the main profiling exercise in Region Pacifico Sur, area profiling was carried out in Distrito Pejibaye. The area profile was completed and production alternatives were elaborated for corn and bean. CATIE cooperated in this part of the activity. 37 national technicians from Centro Agricola Regional Pacifico Sur participated. Coordinator for the project was Lic. V. Vasquez.

In 1980 began the main profiling activity. The areas chosen were the cantones Perez Zeledon, Buenos Aires, Coto Brus, Osa, Golfito, and Corredores. Four area profiles were developed as Osa, Golfito, and Corredores were combined into one profile. Production packages were elaborated for corn, bean, rice, and coffee. The same technicians as before from the Centro participated in this activity. Coordinator on behalf of the project was this time Lic. A. Ybarra.

Panama. Based on an agreement with Ministerio de Desarrollo Agropecuario (MIDA) and Direccion Nacional de Planificacion Sectorial (DNPS) area profiling was executed in Distrito de Renacimiento and Centro y Oriente de Chiriqui. Two area profiles resulted and eleven production packages were elaborated. The alternative production packages were for rice (2),corn (2), bean (2), coffee, poroto, tomato, tobacco, and maracuya. In Panama the project received the coopration of CATIE.

30 national technicians participated. Coordination by the project was performed by Lic. A. Espinoza.

The area profile methodology is still being used and various refinements have been developed to make the methodology more effective.

Summary. In total numbers the project elaborated 18 area profiles and 47 alternative production methods. 254 national technicians received training in the area profiling and alternative production package methodology while participating in this activity.

The strategy used in all the countries was to begin the

process by inviting high level administrators to a seminar in which the objective and general modus operandi of the activity was explained and discussed. Generally an agreement was reached and the areas of interest were chosen. The next step was to hold a technical seminar in which the prospective participants in the exercise participated. In this seminar the methodology was explained in detail and work plans, time tables, and budgets were elaborated. After this, began the actual work that would conclude in the elaboration of the area profiles and production packages and their final publication.

To show the great need of the methodology to be flexible in its approach to information gathering and data processing a short summary of field experiences will serve as illustration.

In gathering primary information, the project applied general accepted statistcal methods. In Central America, the types of samples, rather than their sizes, varied greatly among the five participating countries. This variation was related to the the availability of the basic instruments for sampling (sampling frame, list frame, census segments, etc.)

In two of the five countries, census segments were used and a certain percentage of the population was interviewed within each area segment. The home was the basic sample unit in both countries. In country A, approximately 10% of the population of the entire area was interviewed. A non-random sample was used, since updated house listings were not available. Country B used a 15 to 17% random sample, but interviews were made only in those segments within certain valleys of interest. Country C used the area sampling frame as a reference and, since the frame segments were too big for project purposes, it was necessary to design special segments for the area profile. In this country, the interviews were made in 10 -15% of the new segments; within these segments, all of the population was interviewed. In country D, no census segments were available; the unit equivalent to a segment was a small district. Replicated sampling was used here; therefore, a small initial study was necessary to determine the size of the ideal sample. Country E did not obtain a true statistical sample. Instead, a verification test was given to certain farmers selected from a list provided by the agricultural extension service. In this case a specific study had previously been made for certain crops by interviewing a number of " sucessful" farmers. The aim was to determine the zone's realistic productive potential, as well as the technological level related to this potential. Under these conditions the purpose of the area profile was to become acquainted with farmers who were to receive some production alternative recommendations derived from the previous study.

Each country conducted its sampling to meet its immediate needs. In some cases, sampling was closer to the statistical ideal than in others but, most importantly the results were useful and met the requirements of the interested sectors.

Data processing was done electronically in four countries. Two countries provided to the work team a data processing specialist from the national institution that developed the area profile. The other two countries provided specialists from outside the directing institution.

To input data into the computer, two countries first entered data using punch cards and the information was then later transferred to magnetic tape. A third country first registered its data on disc and then on magnetic tapes. The fourth country registered its information directly on disc using an interactive terminal.

Only one country manually processed the data collected; this team used small pocket calculators and desk calculators. Although tedious, this manually processing allowed the team to get a better feel for the information. Of course the manually process has no memory so an institution that wishes to use this information in the future for other purposes must repeat the entire process.

The regional coordinator of this activity was Lic. V. Vasquez.

Operational activity 3. Establishment of specialized agricultural data and information centres.

End of project status: (1) 200 national technicians have received training in methodologies and procedures in data base development for the establishment of the national information centres network. (2) A national thesaurus has been developed and is being used in each country. (3) In each of the six countries a national information centres network is in operation, with at least three of the key agricultural information institutions cooperating. (4) Information agencies in the network are using standardized methodologies for control, memory, analysis and use packaging of information. (5) The national information network in each country has provided for appropriate information and data interchange among Central American countries and with Central American regional and international agricultural information agencies.

With the integration of the project into CIDIA this activity became the responsibility of the CIDIA division for documentary information. Only the coordination of the activity at project level and compliance with project requirements remained the responsibility of the project leader. Execution, strategy, and technical assistance rested with the division chief of documentary information.

Before the integration, beginning with phase two proposals for the establishment of national networks had been elaborated and negotiations at national level initiated. Also work on thesaurus development had started and the optical coincidence system was introduced in some countries at institutional level.

The project extended financial support to national technicians to participate in AGRINTER Round Table meetings in Peru, 1979 and in Bolivia in 1980. As mentioned earlier the AGRINTER is the regional subsystem of the FAO sponsored AGRIS world agricultural information system. On a yearly basis the system AGRINTER held a hemispheric meeting to discuss organizational matters and progress of the system.

The original idea of establishing a regional thesaurus was abandoned in 1981, when FAO announced a project to establish a worldwide agricultural thesaurus AGROVOC. For this reason it was decided to terminate regional and national thesaurus work and instead collaborate with FAO in its development work. FAO has now completed this activity and the thesaurus will be operational in

1984. Project support took the form of training courses in the application and use of the thesaurus. Institutional thesauri were then developed so they would be compatible with AGROVOC.

In cooperation with AID Information Service a series of seminars were offered in Selective Dissemination of Information (SDI) and user profile construction.

Before the project began its activities the format used by AGRIS for its bibliographical information system had been introduced and established by CIDIA as the common format for bibliographical information input and exchange. All the Central American countries had adopted and were using the system. As a matter of course the project continued working with national institutions strenghthening their use of the format and their participation in the world system.

Guatemala. The national information network proposed by the project was approved and constituted by presidential decree. An institutional thesaurus was developed at DIGESA. Also the optical coincidence system was accepted by DIGESA.

35 national technicians received training in information handling.

Cooperating national institutions were DIGESA, USPADA, and Facultad de Agronomia, Universidad de San Carlos.

El Salvador. Also the execution of this activity suffered as a result of the political situation in the country during phase two. Technical assistance missions for training purposes continued when possible but no national network was approved. Nor was the optical coincidence system or thesaurus work introduced.

64 national technicians received training.

Cooperating national institutions were CENTA and Facultad de Agronomia, Universidad de El Salvador.

Honduras. A national agricultural information network was approved and instituted to be coordinated by CEDIA.

At CEDIA was also installed the optical coincidence system and an institutional thesaurus was developed.

At the same time as the project was working with CEDIA , IDRC of Canada donated $ 50.000 to CEDIA to strenghthen the participation of the newly established network in the world agricultural information system AGRIS. This effort greatly enhanced the work carried out by the project. In 1983 a new project was approved by IDRC to install ISIS at CEDIA to enable the network to offer SDI to its users. The ISIS software is being installed by CIDIA technicians.

68 national technicians received training.

Cooperating national institution was CEDIA.

Nicaragua. Before the Revolution in Nicaragua a plan for the establishment of a national agricultural bibliographical information network was elaborated. The plan received approval in principle but due to the change in government the network was never instituted. After the Revolution a decision was made to create a national information system for technical information and agriculture became a subsystem of this new network. CENIT coordinated this effort.

Also before the Revolution the optical coincidence system had been introduced at Facultad de Ciencias Agricolas and an institutional thesaurus elaborated. With the change over all was

transferred to CENIT.

A reorganization of information handling has now taken place and Centro Nacional de Informacion y Documentacion Agropecuaria (CNIDA) will be established to handle agricultural information beginning in 1984. CIDIA has been requested to offer technical assistance in creating this new centre.

20 national technicians received training.

Cooperating national institutions were Facultad de Ciencias Agricolas and CENIT.

Costa Rica. In Costa Rica the project did not develop any plans for a national information network as AID Costa Rica was already preparing a project " Information for Development" and agriculture was included in this plan. The project did to some extent participate in the formulation of the AID project. As it turned out the project did not receive approval by national authorities and it was not until 1984 that a national network was established as the result of a combined effort by IDRC of Canada and CIDIA. The network is coordinated by SEPSA.

An institutional thesaurus was developed at SEPSA and the UNITERM system was used.

130 national technicians received training.

Cooperating national institution was SEPSA.

Panama. Plans for a national information network in Panama was developed by the project and presented to national authorities. The plan received national support but as funding did not materialize as expected the plan was never carried out and there is still no national information network in Panama.

The project did not introduce the optical coincidence system or thesaurus work in Panama as IDIAP decided to seek technical assistance from other sources not related to the project.

18 national technicians participated in project activities.

Cooperating national institution was IDIAP.

Summary. In total 335 national technicians received training in documentary information handling.

Institutional thesauri were developed in four countries.

Plans for the establishment of national bibliographical agricultural information networks were prepared for four countries. During phase two, networks were instituted in two countries and two other countries have since instituted systems and one country is in the process of establishment. All countries are using the AGRIS format for processing and information exchange.

The regional coordinator for this activity was Lic. H. Caseres

Operational activity 4. Project administration, coordination, and institutionalization.

End of project status: (1) IICA has the capability and has accepted the responsibility to provide follow- up assistance to the Central American countries national and regional research and information agencies.(2) IICA is providing necessary management and supervision at the IICA institutional, regional, and national level.(3) IICA has working in this effort no less than four full-time technical personnel, including project manager, three half-time technicians permanently assigned, plus ten technicians for short-term technical assistance for approximately 16 person/month per year. (4) IICA has resources to provide operational funds.

(5) IICA has training and conf rence facilities available at its main headquaters for follow-u activities, and will provide coordinating office logistics i each country.

As mentioned above the PIAD C project became integrated into CIDIA beginning with phase two of the project, and all project activities were carried out as a regional project in IICA's general information programme Within CIDIA the project was constituted as a division of CI IA and the project leader became responsible directly to the director of CIDIA.

The project leader was responsible for the overall coordination of the project, programming, planning, budget formulation, and execution. All programming, planning, and budget formulation was carried out in close cooperation with IICA's national directors who were responsible for execution of national level activities. On a yearly basis the programming process culminated in a meeting of all national directors with project management and technicians so all activities could be integrated and objectives and strategy could be explained and discussed. This procedure proved to be very valuable as many misunderstandings were cleared up and it enabled the directors to better handle problems as they appeared during execution. It is the opinion of the project leader that these meetings were essential in gaining the cooperation and support of the national directors without whose support the project would not have been as sucessful as it was. At the meeting each director received the programme and budget and timetable for all activities to be executed during the following year and the necessary modifications were made, so at the end of the meeting the project had its programme approved and accepted for execution (see Annex 2).

On the day to day operational level the project leader visited each country at least once a month to meet with cooperating institutions to verify project progress and to discuss with national directors and project personnel the general state of affairs. In addition telephone calls were made whenever necessary. The continuous communication maintained, ensured a smooth execution of activities, coordination and adherence to project objectives.

On a monthly basis project management received a detailed financial account from IICA's accounting office of all project expenses incurred during the month. After analysis by the project leader and resolution of possible problems the accounts were approved and processed. It should be pointed out that the project leader had the necessary authority to disallow any financial outlay that was deemed not to be directly for project purposes.

During the life of the project IICA's administrative rules were applied to all administrative, personnel, financial, and technical assistance matters. In some cases IICA's rules were in conflict with rules and procedures adhered to by ROCAP; in those cases the ROCAP rules took precedence.

All during the execution of the project the closest communication, coordination, and cooperation existed between ROCAP and project management.

GENERAL COMMENTS ON THE PROJECT.

In closing a final report it is customary to give an appreciation of the project in general and this will also be attempted here. But how is it possible for anyone who was involved so intensely with the project and for whom the project almost became a way of life to have enough distance and objectivity to present an appreciation that is balanced and unbiased. It is impossible.

In an evaluation report on the project early on during phase two an evaluator began his report describing the project as an ambitious project thereby lauding its intent and fearing arrogance. Undoubtedly the project was ambitious, but it was a positive ambition to radically change the information picture in Central America so as to make information a powerful tool in development.

In retrospect it is easy to see that the project was at least five years ahead of its time for the conditions in Central America. The Central American information environment was not yet ready or prepared for such a modern and radical approach to information management and use as presented by PIADIC. There was not going to be a smooth and easy transition. Many barriers and preconceived ideas had to be softened and persuaded to change. It is to the credit of phase one that it began and effected a change in the environment so decisive that the following phases could operate successfully and achieve such important and lasting results.

Apart from the tangible results of the project, the impressive facts and numbers as presented in this report, there are equally impressive intangible results and residues left by the project. The present state of the art in Central America has been achieved at an accelerated pace. At the technical level Central American information handling has been modernized beyond recognizion. The Region has reached the computerized and automated stage and the methodologies are being applied with reason and understanding. Few believed it possible in 1976 when PIADIC began.

Maybe the greatest achievement of the project has been at the human level. The project changed traditional attitudes and perceptions among administrators and information specialists in the area, of what was information and how it should be handled, that to day it would be inconceivable to revert to the earlier situation. Funds to apply the most modern equipment and procedures may be lacking but the attitude, wish, and skill to do so is there. It is this fact that is the true legacy of PIADIC in Central America.

In closing this report it remains only to thank ROCAP/AID for having had the vision and imagination to visualize and formulate the PIADIC project and for having had the courage to fund it and having it executed.

Project coordinators were Lic. R. Coto (phase one) and F. H. Damtoft (phase two and three).

ACKNOWLEDGEMENT.

As a separate section of this report I wish to thank all those national participants who with enthusiasm worked with us.

A special thank you is due to the administrations of IICA and ROCAP and IICA's and AID's national directors who supported us and helped smooth the way for us.

Finally I must thank all the project technicians, consultants and secretaries who gave so much of their lives and energies to the project and made it such a success. You made PIADIC a great and enriching professional and human experience.

THANK YOU to you ALL.

E. Acevedo, A. Alonso, R. Alvarado, C. Alvarez, A. Alvear, Andrews, G. Appleby, F. Araya, O. Arboleda, C.M. Arias, C. Atlee, A. Ayestaran, I. Barquero, J. Bemis, L. Boone, R. Campos, V. Canales, H. Caseres, J. Castillo, S. Castro, M. Chaverri, A.M.del Cid, R. Clifford, R. Coto, P. Duisberg, M. Eldin, R. Escoto, A. Espinoza, O. Esquivel, P. Ferrero, J. French, Fry, C. Fuentes, G. Gallup, M. Galrao, A. Garro, M. Genis, G. Hargreaves, R. Helms, J. Hoskins, L. Johnson, M.J. deLeon, W. Lodwick, M. Lucas, M.D. Malugani, E. Marin, G. Marshall, R. Mayorga, R. McColaugh, L. Mora, S. Mora, D. Morales, M. Morales, A. Munoz, J. Murphrey, G. Paez, G. Poitevien, V. Quiroga, P. Ramirez, L. Rodriguez, J. Roman, F. Rosales, R. Soikes, L. Torres, R. Vallesoto, J.Ml. Villasuso, V. Vasquez, M. Wallace, P. Wetmore, A. Ybarra.

Documentación e Información Agrícola No. 120 ISSN-0301-438X

INSTITUTO INTERAMERICANO DE COOPERACION PARA LA AGRICULTURA - IICA

CENTRO INTERAMERICANO DE DOCUMENTACION E INFORMACION AGRICOLA - CIDIA

BIBLIOGRAFIA DE LAS PUBLICACIONES DEL PIADIC

PROYECTO DE INFORMACION AGROPECUARIA DEL ISTMO CENTROAMERICANO
-PIADIC-

San José, Costa Rica
1982

PRESENTACION

En 1974 se llevó a cabo en Centroamérica un estudio-diagnóstico sobre los sistemas de información agrícola en la región. El estudio fue un esfuerzo cooperativo entre los países centroamericanos, la Oficina Regional para Programas de Centroamérica (ROCAP) de AID y el Instituto Interamericano de Cooperación para la Agricultura (IICA). Los resultados de dicha investigación mostraron la existencia de severas deficiencias en disponibilidad, organización y uso de la información agrícola, y permitieron apreciar que tal situación tenía una influencia de detrimento en la exitosa definición, diseño y ejecución de proyectos de desarrollo rural.

Como producto de la identificación de estas necesidades fue creado, en 1975, el Proyecto de Información Agropecuaria del Istmo Centroamericano (PIADIC), el cual empezó a implementarse ese mismo año tras de la firma del Convenio Cooperativo entre IICA y ROCAP, en donde se estableció que el IICA sería la agencia ejecutora del Proyecto.

El concepto básico fue crear, a nivel nacional, un sistema integrado con capacidad de identificar necesidades de información, colectar, manejar y analizar dicha información, la cual provendría en general del sector agrícola rural, y en forma especifica de las fincas. Este esfuerzo proporcionaría datos confiables y actualizados a planificadores, ejecutivos, investigadores u otros, para ayudar en la ejecución y desarrollo de programas o actividades afines.

El sistema a ser desarrollado podría servir para varios propósitos, si bien recibirían especial atención los requerimientos para planificación e investigación, lo que sería de gran importancia para el diseño del sistema, los formatos y métodos para manejo y conservación de datos.

Esta *Bibliografía* enlista los documentos elaborados durante la realización del Proyecto de Información Agropecuaria del Istmo Centroamericano; su uso contribuirá a la investigación y al desarrollo del sector rural del área.

Finn H. Damtoft
Director
Centro Interamericano de Documentación e
Información Agrícola-CIDIA

Setiembre, 1982

1. ACEVEDO, E. El sistema de información de mercado y comercialización en Costa Rica; diagnóstico y recomendaciones. San José, Costa Rica, IICA, PIADIC, 1979. 63 p.

2. ALVEAR, A. Actividad I.CD.1410 'Desarrollo de Cambios de Información'. Resultados Julio 1978 - Agosto 1979. San José, Costa Rica, IICA, PIADIC, 1979. 49 p.

3. _____. Lineamientos para la operación del Centro de Documentación del Departamento de Divulgación Agrícola, Guatemala. San José, Costa Rica, IICA, PIADIC, 1979. 7 p.

4. _____, ARIAS, C. L. y YURRITA, R. Red de información documental agrícola, Sector Público de Guatemala. Guatemala, IICA, PIADIC, 1979. 11 p.

5. AMERICAN NATIONAL STANDARD. Instrucciones para el diseño, construcción y uso de un tesauro. Traducido del Inglés por el Instituto Interamericano de Cooperación para la Agricultura. Centro Interamericano de Documentación e Información Agrícola. San José, Costa Rica, IICA, CIDIA, 1981. 26 p.

6. ARAGON ARGUETA, M. et al. Paquete de información tecnológica de frijol para el municipio de Chalatenango. San Andrés, El Salvador, IICA, PIADIC, 198. 47 p.

   Trabajo presentado al Seminario sobre Preparación de Paquetes de Información Tecnológica. El Salvador, 1978.

7. ARIAS, C. L., ed. Encuentro de capacitación e integración del personal de la Zona Norte. Guatemala, IICA, PIADIC, 1979. 102 p.

8. _____. Manual para la preparación de perfiles de área para la formulación de alternativas de producción en áreas específicas. 2 ed. IICA. Documentación e Información Agrícola No. 76. 1979. 2 v.

9. _____ y QUIROGA, V. Sistemas nacionales de información agrícola. A. Subsistema de información documental. B. Subsistema de información numérica. San José, Costa Rica, IICA, PIADIC, 1979. 57 p.

10. BEMIS, J., ed. Integración de los sistemas de información existentes en Centroamérica; algunas alternativas para formuladores de políticas y planeadores. San José, Costa Rica, IICA, PIADIC, 1979. p. irr. (PIADIC 014)

11. BLANCO, C. E. y TELLEZ VADO, S. Bibliografía arroz (Oryza sativa L.). San José, Costa Rica, IICA, PIADIC, 1979. 31 p.

12. BOONE, L. M. Administrando el flujo de información; una guía para comprender y organizar funciones de administración de información. Primer borrador. San José, Costa Rica, IICA, PIADIC, 1976. 40 p. (PIADIC No. 015)

13. BOONE, L. M. Guía para confeccionar paquetes de información tecnológica. San José, Costa Rica, IICA, PIADIC, 1976. 52 p. (PIADIC No. 011).

14. _____. Estado actual de la conceptualización de las necesidades de información agrícola en Centroamérica y prioridades de ayuda en la elaboración de sistemas de información. San José, Costa Rica, IICA, PIADIC, 1978. 10 p. (PIADIG/CS No. 00073).

15. _____. Guía para la preparación de paquetes de información agropecuaria en cuanto a la producción de cultivos específicos en áreas específicas. San José, Costa Rica, IICA, PIADIC, 1978. 21 p.

16. _____. Status of the conceptualization of agricultural information needs in Central America, and assistance priorities for developing information systems. Desarrollo Rural en las Américas (Costa Rica) 10(2):102-108. 1978.

17. CANALES, V. Banco de datos para el sector agropecuario; estudio de antecedentes para el diseño de una red de bancos de datos. San José, Costa Rica, IICA, PIADIC, 1977. 147 p. (PIADIC No. 057).

18. CARBALLO Q., A. y QUIROGA, V. Manual práctico para el análisis de experimentos de campo. San José, Costa Rica, IICA, PIADIC, 1976. 113 p. (PIADIC No. 007).

19. CASTILLO, M. y GALRAO, M. J. Bibliografía agrícola de Costa Rica. IICA. Documentación e Información Agrícola no. 83. 1980. 431 p.

20. CASTILLO VELARDE, J., ed. Esquema de contenido para un perfil de área específica destinado al desarrollo de alternativas de producción agropecuaria. Guatemala, IICA, PIADIC, 1979. 69 p.

21. _____. Glosario seleccionado de información socioeconómica para los sistemas nacionales de información agropecuaria del Istmo Centroamericano (Propuesta preliminar). Guatemala, IICA, PIADIC, 1979. 69 p.

22. _____. Hacia la estructuración de una base de datos sobre variables socioeconómicas para los sistemas nacionales de información agropecuaria del Istmo Centroamericano; documento de discusión. 2 rev. Guatemala, IICA, PIADIC, 1979. 44 p.

23. _____ y ALVEAR, A. Hacia un plan operativo para la puesta en marcha del SNIAG. Guatemala, IICA, PIADIC, 1979. 23 p.

24. CENTRO AGRONOMICO TROPICAL DE INVESTIGACION Y ENSEÑANZA. Guía de procedimientos para el Proyecto CATIE/ROCAP sobre sistemas de producción para el pequeño agricultor; documento para discusión. San José, Costa Rica, IICA, PIADIC, 1976. 59 p.

25. CLIFFORD, R. et al. Estudio de los sistemas de información y datos agropecuarios en Centroamérica. IICA. Publicación Miscelánea no. 128. 1975. v. 1, 330 p.

26. CLIFFORD, R. Informe de progreso, programa de fortalecimiento del sistema de información agropecuaria de Centroamérica, de marzo a setiembre de 1975. Guatemala, IICA, PIADIC, 1975. p. irr.

27. _____, LEON, M. J. de y FLORES, J. E. Estudio de los sistemas de información agropecuaria de Panamá, IICA. Publicación Miscelánea no. 140. 1976. 208 p.

28. COMITE NACIONAL COORDINADOR DE INFORMACION AGROPECUARIA. SUB-COMITE DEL AREA DE INFORMACION SOCIOECONOMICA, EL SALVADOR. Diseño para el estudio sobre demanda y disponibilidad de información socioeconómica del sector agropecuario. San Salvador, El Salvador, IICA, PIADIC, 1978. 13 p.

29. COOPER, E. de. Estado actual del Sistema Nacional de Información Agropecuaria de Honduras. Tegucigalpa, IICA, PIADIC, 1976. p. irr.

30. CORVING, W. Evaluation of future data processing equipment needs and recommended elements of system designs. San José, IICA, PIADIC, s.f. 17 p.

31. COSTA RICA. CENTRO NACIONAL DE INFORMACION AGROPECUARIA DE COSTA RICA. Proyecto de fortalecimiento del CENIA para mejorar la captación, análisis y difusión de la información documental agropecuaria nacional. San José, Costa Rica, IICA, PIADIC, 1979. 9 p.

32. COSTA RICA. MINISTERIO DE AGRICULTURA Y GANADERIA e INSTITUTO INTERAMERICANO DE COOPERACION PARA LA AGRICULTURA. PROGRAMA DE INFORMACION AGROPECUARIA DEL ISTMO CENTROAMERICANO. Bibliografía y base de datos de fuentes secundarias de los perfiles de área del Pacífico Sur de Costa Rica. San José, Costa Rica, 1981. 386 p.

33. _____. Fuentes primarias de los perfiles de área del Pacífico Sur de Costa Rica, IICA, Serie Publicaciones Misceláneas No. 289. 1981. 255 p.

34. _____. Perfiles de área y alternativas de producción; distrito Pejibaye, Cantón Pérez Zeledón, Provincia de San José, Costa Rica. San José, Costa Rica, 1981. 116 p.

35. CRUZ SIERRA, J. R. de la. Zonas bioclimáticas de Guatemala, basado en el mapa Zonas de Vida, esc. 1:500.000. Guatemala, IICA, PIADIC, 1979. 23 p.

36. DAMTOFT, F. H. Transferencia de información, construcción de perfil de intereses. San José, Costa Rica, IICA, PIADIC, 1980. 42 p.

Documento presentado en el Primer Curso sobre Documentación Agrícola Nacional, Guatemala, 1980.

37. _____. Managing information for selective dissemination construction of interest profiles. San José, Costa Rica, IICA, PIADIC, 1981. 23 p. (PIADIC Information Management Series no. 3)

38. DUISBERG, P. Manual para obtener y utilizar datos de recursos naturales; primer borrador. San José, Costa Rica, IICA, PIADIC, 1976. 109 p. (PIADIC No. 009).

39, EL SALVADOR. CENTRO NACIONAL DE TECNOLOGIA AGROPECUARIA. Fortalecimiento de la Biblioteca del CENTA en el proceso de análisis de la información documental agrícola producida en El Salvador. San Andrés, El Salvador, IICA, PIADIC, 1979. 18 p.

40. ESCOTO L., R. Concepto de sistemas y teoría general de los sistemas como instrumento de análisis para el diseño y generación de sistemas de información agropecuaria. San José, IICA, PIADIC, s.f. 41 p.

41. _____. et al. Diseño del Sistema de Información Agropecuaria de Honduras (SIAH); preliminar sujeto a revisión y aprobación. San José, Costa Rica, IICA, PIADIC, 1978. 99 p.

42. FLORES ERWIN, J., comp. Seminario Profesional IICA-ZN sobre sistemas de información agropecuaria; bibliografía y resúmenes. Guatemala, IICA, PIADIC, s.f. 19 p.

43. FRENCH, J. Report on coffee producers from Pérez Zeledón and Coto Brus, Pacífico Sur, Costa Rica. San José, Costa Rica, IICA, PIADIC, 1981. 33 p.

44. FUENTES, C. Sistema de Información Agropecuaria de Panamá. San José, Costa Rica, IICA, PIADIC, s.f. 7 p.

45. GARCIA PAPPA, H. Propuesta preliminar para el desarrollo del Sistema Nacional de Información Agrícola de Guatemala. Guatemala, IICA, PIADIC, 1977. 81 p.

46. GARRO, A. Métodos y operación de un banco de datos. San José, Costa Rica, IICA, PIADIC, 1979. 37 p.

47. _____. Manual de organización de la información en archivos magnéticos (Banco de Datos), encuesta rural, Nicaragua 1980. IICA. Documentación e Información Agrícola no. 99. 1981. 65 p.

48. _____. Manual de organización de la información en archivos magnéticos (Banco de Datos), encuesta rural Pacífico Sur, Costa Rica. IICA. Documentación e Información Agrícola no. 101. 1981. 99 p.

49. GUATEMALA. DIRECCION GENERAL DE SERVICIOS AGROPECUARIOS E INSTITUTO INTERAMERICANO DE COOPERACION PARA LA AGRICULTURA. PROYECTO DE INFORMACION AGROPECUARIA DEL ISTMO CENTROAMERICANO. Informe agrícola de la encuesta sobre alternativas de producción en el cultivo de la fresa. Guatemala, 1980. 27 p.

50. _____. Informe agrícola de la encuesta sobre alternativas de producción en el cultivo de la papa. Guatemala, 1980. 25 p.

51. _____. Informe agrícola de la encuesta sobre alternativas de producción en el cultivo del cardamomo. Guatemala, 1980. 21 p.

52. GUATEMALA. DIRECCION GENERAL DE SERVICIOS AGROPECUARIOS E INSTITUTO INTERAMERICANO DE COOPERACION PARA LA AGRICULTURA. PROYECTO DE INFORMACION AGROPECUARIA DEL ISTMO CENTROAMERICANO. Informe agrícola de la encuesta sobre alternativas de producción en el cultivo del melocotón. Guatemala, 1980. 30 p.

53. _____. Informe agrícola de la encuesta sobre alternativas de producción en el cultivo del repollo. Guatemala, 1980. 44 p.

54. GUATEMALA. MINISTERIO DE AGRICULTURA E INSTITUTO INTERAMERICANO DE COOPERACION PARA LA AGRICULTURA. PROYECTO DE INFORMACION AGROPECUARIA DEL ISTMO CENTROAMERICANO. Perfiles de área y alternativas de producción, Chimaltenango y Quezaltenango, Rep. de Guatemala. San José, Costa Rica, 1981. p. irr.

55. HARGREAVES, G. H. El clima y la producción de granos alimenticios. (Un manual para la zonificación agroclimática del Istmo Centroamericano). San José, Costa Rica, IICA, PIADIC, 1980. 8 p.

56. _____. Estimación de la radiación solar. San José, Costa Rica, IICA, PIADIC, 1980. 17 p.

57. HELMS, R. W. A short course in research data management using SAS. San José, Costa Rica, IICA, PIADIC, 1980. 94 p.

58. HONDURAS. MINISTERIO DE RECURSOS NATURALES. DIRECCION AGRICOLA REGIONAL NORTE-UNIDAD REGIONAL DE PLANIFICACION (CONSUPLANE) E INSTITUTO INTERAMERICANO DE COOPERACION PARA LA AGRICULTURA. PROYECTO DE INFORMACION AGROPECUARIA DEL ISTMO CENTROAMERICANO. Estudio semidetallado capacidad de uso de la tierra en los valles de Sulaco y Victoria. San Pedro, Sula, Honduras, 1981. 140 p.

59. _____. Formulación de perfiles de área; perfil de ciencia y tecnología del valle de Sulaco. San Pedro, Sula, Honduras, 1981. 41 p.

60. _____. Formulación de perfiles de área; perfil de ciencia y tecnología del valle de Victoria. San Pedro, Sula, Honduras, 1981. 32 p.

61. _____. Formulación de perfiles valles de Yoro; estudios socioeconómicos del valle de Victoria. San Pedro, Sula, Honduras, 1981. 53 p.

62. _____. Perfiles de área de los valles de Yoro; estudio socioeconómico del valle de Sulaco. San Pedro, Sula, Honduras, 1981. 58 p.

63. _____. Perfiles de área de los valles de Yoro; formulación de perfiles de área de los valles de Sulaco y Victoria; estudios hidroclimatológicos. San Pedro, Sula, Honduras, 1981. 26 p.

64. _____. Síntesis de los perfiles de área de los valles de Yoro e informe del seminario-taller sobre perfiles de área y desarrollo de los valles Sulaco y Victoria. San Pedro, Sula, Honduras, 1981. 93 p.

65. HONDURAS. SECRETARIA DE RECURSOS NATURALES. CENTRO DE DOCUMENTACION E INFORMACION AGRICOLA. Ampliación de la capacidad para la recolección, análisis y difusión de la información documental agrícola en Honduras. Tegucigalpa, IICA, PIADIC, 1978. 11 p.

66. INSTITUTO INTERAMERICANO DE CIENCIAS AGRICOLAS. PROYECTO DE INFORMACION AGROPECUARIA DEL ISTMO CENTROAMERICANO. Descripción general del Programa. San José, Costa Rica, 1975. 16 p.

67. _____. Estudio de los sistemas de información y datos agropecuarios en Centroamérica: Costa Rica; separata. Guatemala, 1975. p. irr.

68. _____. Estudio de los sistemas de información y datos agropecuarios en Centroamérica: El Salvador; separata. Guatemala, 1975. p. irr.

69. _____. Informe de progreso; programa de fortalecimiento del Sistema de Información Agropecuaria de Centroamérica. San José, Costa Rica, 1975. 9 p. (PIADIC No. 004).

70. _____. Guía para confeccionar paquetes de información tecnológica. Primer borrador. San José, Costa Rica, 1976. 51 p. (PIADIC No. 011).

71. _____. Informe de la evaluación del Programa a noviembre de 1976. Guatemala, 1976. 42 p.

72. _____. Informe de progreso no. 4, del 21 de mayo al 21 de setiembre de 1976. San José, Costa Rica, 1976. 8 p. (PIADIC No. 020).

73. _____. Integración de los sistemas de información existentes en Centroamérica. Algunas alternativas para formuladores de política y planeadores (borrador). San José, Costa Rica, 1976. (PIADIC No. 014).

74. _____. Manual de organización, planificación y operación de los Comités Nacionales de Coordinación. San José, Costa Rica, 1976. 94 p. (IICA. Documentación e Información Agrícola no. 48).

75. _____. Programa de Información Agropecuaria del Istmo Centroamericano; organización, propósitos y actividades. San José, Costa Rica, 1976. 14 p. (PIADIC No. 003).

76. _____. Programa propuesto para la Reunión de Directores de Planificación Agrícola y de Directores de Investigación y Extensión Agropecuaria del Istmo Centroamericano. Tegucigalpa, 1976. 4 p.

77. _____. Transferencia y mejoramiento en el uso de información agropecuaria; algunas alternativas para formuladores de políticas y planeadores. San José, Costa Rica, 1976. 156 p. (PIADIC No. 016).

78. _____. Comités Asesores y Coordinadores del PIADIC. San José, Costa Rica, 1977. 13 p.

79. _____. Diseño de un sistema y plan para el establecimiento del Sistema de Información Agropecuaria de Honduras. San José, Costa Rica, 1977. 43 p.

80. INSTITUTO INTERAMERICANO DE CIENCIAS AGRICOLAS. PROYECTO DE INFORMACION AGROPECUARIA DEL ISTMO CENTROAMERICANO. Diseño del Sistema de Información Agropecuaria de Nicaragua (SIAN); documento de trabajo julio 1977. San José, Costa Rica, IICA, PIADIC, s.f. 318 p.

81. _____. Diseño del Sistema de Información Agropecuaria de Costa Rica (SIACR); documento de trabajo y proyecto para el financiamiento implantación del Sistema y Plan Nacional de Información Agropecuaria. San José, Costa Rica, 1977. 53 p.

82. _____. Documentos para el Taller Regional de Información sobre Comercialización Agrícola. Guatemala, 1977. p. irr.

83. _____. Plan para la coordinación del Sistema Nacional de Información Agropecuaria de Panamá. Panamá, 1977. 30 p.

84. _____. Plan preliminar del Sistema Nacional de Información Agrícola. Guatemala, 1977. 74 p.

85. _____. Propuesta de preparación de un proyecto multinacional de capacitación de personal, para la implementación del Programa de Información Agropecuaria del Istmo Centroamericano. San José, Costa Rica, 1977. 5 p. (PIADIC No. 059).

86. _____. Reglamento del Comité Coordinador del Sistema Regional de Información Agropecuaria (CCSR). San José, Costa Rica, 1977. 6 p. (PIADIC No. 026).

87. _____. Resumen de áreas de énfasis, actividades e implementación del PIADIC para el período enero/1977-marzo 31/1979. San José, Costa Rica, 1977. 18 p. (PIADIC No. 024).

88. _____. El sistema de información de mercados en Panamá. San José, Costa Rica, 1977. p. irr.

89. _____. Consideraciones sobre los servicios de información de mercados agrícolas y características del modelo aplicado a los países del Istmo Centroamericano. San José, Costa Rica, 1978. 17 p.

90. _____. Establecimiento del Sistema Nacional de Información Agropecuaria de Panamá (SINIA-P), proyecto. Panamá, 1978. 11 p.

91. _____. Hacia un plan operativo para el Subsistema de Información Socioeconómica. San Salvador, El Salvador, 1978. 8 p.

92. _____. Informe a los Comités Regionales sobre progresos del Programa y acciones cumplidas al 31 de marzo de 1978. San José, Costa Rica, 1978. 24 p. (PIADIC/RR No. 068).

93. _____. Marco de referencia para la organización del Sistema Nacional de Información Agrícola de Guatemala (SNIAG). San José, Costa Rica, 1978. 11 p.

94. INSTITUTO INTERAMERICANO DE CIENCIAS AGRICOLAS. PROYECTO DE INFORMACION AGROPECUARIA DEL ISTMO CENTROAMERICANO. Plan maestro para el establecimiento del Sistema de Información Agropecuaria de Honduras (SNIAG). Tegucigalpa, Honduras, 1978. 30 p.

95. _____. Project for training human resources for the improvement of documental and numerical information in the agricultural sector of Central America. San José, Costa Rica, 1978. 59 p. (PIADIC/DV No. 0074).

96. _____. Propuesta para el establecimiento del Sistema Nacional de Información Agropecuaria de Panamá. San José, Costa Rica, 1978. 41 p. (PIADIC(CS)No. 0091).

97. _____. Proyecto de capacitación de los recursos humanos para el mejoramiento de la información documental y numérica del sector agropecuario del Istmo Centroamericano. San José, Costa Rica, 1978. 41 p.

98. _____. Proyecto establecimiento del Sistema Nacional de Información Agropecuaria en Panamá. Sub-proyecto estadísticas básicas. A. Ampliación y actualización del marco muestral de áreas. B. Procesamiento de datos. Panamá, 1978. 11 p.

99. _____. Traducción del informe sobre la evaluación del PIADIC realizada en noviembre/diciembre de 1977 por Development Alternatives Inc. Guatemala, 1978. 24 p. (PIADIC/DV No. 0069).

100. _____. Cooperación técnica al Instituto Salvadoreño de Transformación Socio-Económica y Tecnológica, pertinentes a las Asociaciones Comunitarias Campesinas. San José, Costa Rica, 1979. 4 p.

101. _____. Cuadro coyuntural de la agricultura y del desarrollo agrícola. San José, Costa Rica, 1979. 6 p.

102. _____. Cuadro de clasificación de suelos. San José, Costa Rica, 1979. 29 p.

103. _____. Cuadro de clasificación geográfica y regional. San José, Costa Rica, 1979. 43 p.

104. _____. Cuadro de clasificación por objeto climas y elementos del clima. San José, Costa Rica, 1979. 22 p.

105. _____. Equipo y suministros. San José, Costa Rica, 1979. 38 p.

106. _____. Gt-Guatemala. San José, Costa Rica, 1979. 100 p.

107. _____. Hn-Honduras. San José, Costa Rica, 1979. 21 p.

108. _____. Hoja de entrada de investigaciones en curso. San José, Costa Rica, 1979. s.p.

109. _____. Hoja de entrada de investigadores. San José, Costa Rica, 1979. s.p.

110. INSTITUTO INTERAMERICANO DE CIENCIAS AGRICOLAS. PROYECTO DE INFORMACION AGROPECUARIA DEL ISTMO CENTROAMERICANO. Hoja de entrada de organismos de investigación. San José, Costa Rica, 1979. s.p.

111. _____. ISIS: Manual para usuarios. IICA. Documentación e Información Agrícola no. 73. 1979. 61 p.

112. _____. Ni-Nicaragua. San José, Costa Rica, 1979. 18 p.

113. _____. Pa-Panamá. San José, Costa Rica, 1979. 49 p.

114. _____. Perfil de proyecto: fortalecimiento de los Sistemas de Información Agropecuaria en la región del Caribe. San José, Costa Rica, 1979. 20 p.

115. _____. Plan maestro para el establecimiento del Sistema Nacional de Información Agropecuaria de Honduras (SNIAH). Tegucigalpa, 1979. 31 p. (PIADIC/CS No. 00094).

116. _____. Plantas y animales utilizados por el hombre. San José, Costa Rica, 1979. 55 p.

117. _____. Productos agrícolas y alimentos. San José, Costa Rica, 1979. 37 p.

118. _____. Propuesta para el establecimiento del Sistema Nacional de Información Agrícola de Guatemala. San José, 1979. 37 p.

119. _____. Qué es PIADIC? San José, Costa Rica, 1979. 10 p.

120. _____. Sistema de Información para la Investigación Agropecuaria. San José, Costa Rica, 1979. 21 p.

121. _____. Sistema de Información para la Investigación Agropecuaria. San José, Costa Rica, 1979. 21 p.

122. _____. Sistema de Información para la Investigación Agropecuaria-SINIA. IICA. Documentación e Información Agrícola no. 77. 1979. 32 p.

123. _____. Sistema Nacional de Información Agropecuaria de Honduras (SNIAH); red de información documental; versión preliminar. San José, Costa Rica, 1979. 14 p.

124. _____. Socioeconomía. San José, Costa Rica, 1979. 13 p.

125. _____. SV-El Salvador. San José, Costa Rica, 1979. 42 p.

126. _____. Zonas de vida ecológicas de Región Norte de El Salvador por Municipio. San Salvador, 1979. s.p.

127. _____. Perfil específico del complejo "Iván Montenegro" y alternativas tecnológicas de producción agrícola. Managua, INRA, 1980. p. irr.

128. INSTITUTO INTERAMERICANO DE CIENCIAS AGRICOLAS. PROYECTO DE INFORMACION AGROPECUARIA DEL ISTMO CENTROAMERICANO. SINIA: registros de entrada para un banco de datos sobre recursos genéticos. San José, Costa Rica, 1980. 179 p.

129. _____. Catálogo colectivo de las publicaciones periódicas de las Bibliotecas del CIDIA. IICA. Documentación e Información Agrícola No. 96. 1981. 514 p.

130. _____. Curso corto sobre manejo de datos de investigación usando SAS. Trad. del inglés. IICA. Documentación e Información Agrícola No. 95. 1981. 90 p.

131. _____. Centro regional de información comercial de productos agropecuarios. San José, Costa Rica, s.f. 17 p.

132. _____. Proyecto establecimiento del Sistema Nacional de Información Agropecuaria de Panamá (SINIA-P). San José, Costa Rica, s.f. 11 p.

133. _____. E INSTITUTO NACIONAL DE COMERCIALIZACION AGRICOLA. DIRECCION DE SERVICIOS TECNICOS. Requerimientos de información de mercado de los productores organizados en comités de comercialización de la Costa Sur, versión preliminar. Guatemala, 1978. 45 p. Anexos.

134. INSTITUTO INTERAMERICANO DE COOPERACION PARA LA AGRICULTURA. PROYECTO DE INFORMACION AGROPECUARIA DEL ISTMO CENTROAMERICANO. Geomast. Una guía del usuario para la versión 2.0 del programa creador del archivo maestro geográfico. IICA. Documentación e Información Agrícola no. 106. 1981. 77 p.

135. _____. Una guía del usuario para la Versión 2.0 del programa creador del archivo maestro geográfico. IICA. Documentación e Información Agrícola no. 106. 1981. 77 p.

136. _____. Una guía del usuario a la Versión 3 del programa analítico de recursos geográficos. IICA. Documentación e Información Agrícola no. 98. 1981. 110 p.

137. McCOLAUGH, R., ed. Guía para la ejecución del diagnóstico de los sistemas nacionales de información. San José, Costa Rica, IICA, PIADIC, 1977. 118 p. (PIADIC No. 008).

138. _____. Mapas de suelo del estudio semidetallado, capacidad de uso de la tierra de los Valles de Sulaco y Victoria. Honduras, 1981. Esc. 1:10.000. p. irr.

139. _____. Perfiles de áreas rurales. IICA. Documentación e Información Agrícola no. 110. 1982. p. irr.

140. MARIN CASTILLO, E. J. Manual de definiciones y parámetros de variables edafológicas. Managua, IICA, PIADIC, 1979. 77 p.

141. _____. Manual de parámetros para evaluar la capacidad de uso de las tierras. San José, Costa Rica, IICA, PIADIC, 1979. 14 p.

142. MARIN CASTILLO, E. J. Inventario de la información edafológica y listado bibliográfico, Nicaragua. Managua, Nicaragua, IICA, PIADIC, 1980. p. irr.

143. MARSHALL, E. G. e YBARRA ROJAS, A. Sistema de principales indicadores para el diagnóstico social del perfil de área. San José, Costa Rica, IICA, PIADIC, 1979. 32 p.

144. MARTINEZ ORTIZ, R. et al. Paquete de información tecnológica maíz-sorgo. San Andrés, El Salvador, IICA, PIADIC, 1978. 60 p.

Documento presentado en el Seminario sobre Preparación de Paquetes de Información Tecnológica, El Salvador, 1978.

145. NICARAGUA. MINISTERIO DE DESARROLLO AGROPECUARIO Y REFORMA AGRARIA E INSTITUTO INTERAMERICANO DE COOPERACION PARA LA AGRICULTURA. PROYECTO DE INFORMACION AGROPECUARIA DEL ISTMO CENTROAMERICANO. Perfil de área rural específica Bocana de Paiwas - Departamento de Zelaya, República de Nicaragua. Managua, Nicaragua, 1981. 129 p.

146. _____. Perfil de área rural específica El Jícaro - Departamento de Nueva Segovia, República de Nicaragua. Managua, Nicaragua, 1981. 176 p.

147. _____. Perfil de área rural específica San Carlos - Departamento de Río San Juan, República de Nicaragua. Managua, Nicaragua, 1981. 129 p.

148. OFICINA PROFESIONAL DE ECONOMISTAS Y CONTADORES PUBLICOS, GUATEMALA. Definición e identificación de los elementos que conforman el Sistema Nacional de Información Agrícola de Guatemala. Guatemala, IICA, PIADIC, 1978. 291 p.

149. PAEZ, G. Directrices básicas para el Sistema de Información Técnico-Científica de la Investigación Agropecuaria del Istmo Centroamericano. In Informe sobre reunión de directores de investigación agrícola de Centro América y Panamá. Guatemala, IICA, PIADIC, 1979. pp. 3/1-3/17.

150. PANAMA. INSTITUTO DE INVESTIGACIONES AGROPECUARIAS. Fortalecimiento de la capacidad institucional en Panamá para el análisis y control de la información agropecuaria nacional. Panamá, IICA, PIADIC, 1973. 13 p.

151. PANAMA. MINISTERIO DE DESARROLLO AGROPECUARIO. DIRECCION NACIONAL DE PLANIFICACION SECTORIAL E INSTITUTO INTERAMERICANO DE COOPERACION PARA LA AGRICULTURA. PROYECTO DE INFORMACION AGROPECUARIA DEL ISTMO CENTROAMERICANO. Perfil de área distrito de Renacimiento. Santiago de Veraguas, Panamá, 1981. v. 2, 150 p.

152. _____. Perfil de área distrito de Renacimiento Centro y Oriente ce Chiriquí resumen. Santiago de Veraguas, Panamá, 1981. v 1, 34 p.

153. PENA L., A. Algunas ideas sobre la utilización de la radio en la difusión de noticias de mercado. San José, IICA, PIADIC, s.f. 17 p.

154. PEREZ SINGER, H. Localización y ordenamiento de la información obtenida, como primera etapa para la preparación de un perfil de área específico para el sector Ixcan, de la Franja Transversal del Norte. Guatemala, IICA, PIADIC, 1980. 69 p.

155. PIADICARTA (IICA). San José, Costa Rica. No. 1-10, 1977-1978. Bimestral.

156. PORRAS G., L. A. y HERRERA M., C. G. Informe de la Dirección General de Estadística de la República de Guatemala. San José, Costa Rica, IICA, PIADIC, 1976. 23 p.

157. QUIROGA, V. Manual práctico para el análisis de experimentos de campo. IICA. Publicación Miscelánea no. 142. 1976. 113 p.

158. _____, PAEZ, G. y ZAMORA, M. Manual de codificación, almacenamiento y recuperación de información bibliográfica. IICA. Publicación Miscelánea no. 148. 1977. 24 p. Anexos.

159. _____ . Manual de estadística descriptiva. IICA. Publicación Miscelánea no. 147. 1977. 82 p.

160. _____. Manual para estimar parámetros de seis modelos aplicado a fenómenos sociales, económicos y biológicos. IICA, Publicación Miscelánea no. 145. 1977. 136 p.

161. _____. Modelo genérico de sistema nacional de información agrícola, sistema numérico. San José, Costa Rica, IICA, PIADIC, 1978. 26 p.

162. _____. Algunas consideraciones sobre la tecnología informacional numérica, información en curso y socioeconómica. Panamá, IICA, PIADIC, 1979. 22 p.

163. _____. Manual de Introducción al SAS. IICA. Publicación Miscelánea no. 218. 1979. 79 p.

164. _____. Manual práctico para el análisis de datos obtenidos por muestreo. IICA. Publicación Miscelánea no. 214. 1979. 54 p.

165. REICHE, C. E. et al. Seminario sobre preparación de alternativas de producción "Maíz" (Guatemala). San José, Costa Rica, IICA, PIADIC, 1978. 56 p.

166. _____. Seminario sobre preparación de paquetes de información tecnológica. San José, IICA, PIADIC, 1978. 45 p.

167. REUNION COMITE COORDINADOR DEL SISTEMA REGIONAL DE INFORMACION AGROPECUARIA, 2a, GUATEMALA, 1976. Guatemala, IICA, PIADIC, 1976. 45 p.

168. REUNION COMITE REGIONAL INTERINSTITUCIONAL ASESOR Y COMITE COORDINADOR DEL SISTEMA REGIONAL DE INFORMACION AGROPECUARIA, 3a, SAN JOSE, COSTA RICA, 1978. Procedimientos y documentos de trabajo. San José, Costa Rica, IICA, PIADIC, 1978. v. 1, 55 p.

169. REUNION CON DIRECTORES DE ORGANISMOS CLAVES Y COMITES REGIONALES PARA LA REVISION DEL PROGRAMA DE INFORMACION AGROPECUARIA DEL ISTMO CENTROAMERICANO, SAN JOSE, COSTA RICA, 1976. Conclusiones, Recomendaciones y Resoluciones. San José, IICA, PIADIC, 1976. p. irr.

170. _____. Informe. San José, IICA, PIADIC, 1976. p. irr. (PIADIC No. 018).

171. REUNION CONJUNTA DE LOS COMITES REGIONALES DEL PIADIC, SAN JOSE, COSTA RICA, 1977. Acta final. San José, IICA, PIADIC, 1977. 43 p.

172. REUNION CONJUNTA DE ORGANISMOS ASESORES DEL PIADIC, SAN JOSE, COSTA RICA, 1976. Material de la reunión conjunta de organismos asesores del PIADIC. San José, IICA, PIADIC, 1976. p. irr.

173. REUNION CONJUNTA DE LOS COMITES REGIONALES ASESORES, 3a., SAN JOSE, COSTA RICA, 1978. Informe de los Comités Asesores Regionales del PIADIC sobre la situación del Proyecto a Octubre de 1978. San José, Costa Rica, IICA, PIADIC, 1978. 10 p.

174. _____. III Reunión conjunta de los Comités Regionales Asesores. San José, Costa Rica, IICA, PIADIC, 1978. 11 p.

175. REUNION CONJUNTA DEL COMITE REGIONAL INTERINSTITUCIONAL ASESOR Y EL COMITE COORDINADOR DEL SISTEMA REGIONAL, 2a, SAN JOSE, COSTA RICA, 1978. San José, Costa Rica, IICA, PIADIC, 1978. 33 p. (PIADIC No. 00072).

176. REUNION DE DIRECTORES DE ESTADISTICA Y CENSO Y DE ORGANISMOS DE COMERCIALIZACION DEL ISTMO CENTROAMERICANO, 2a., PANAMA, 1976. Acta de la II reunión de directores de estadística y censo y de organismos de comercialización del Istmo Centroamericano. Panamá, IICA, PIADIC, 1976. 23 p.

177. REUNION DEL COMITE COORDINADOR DEL SISTEMA REGIONAL DE INFORMACION AGROPECUARIA, 1a, SAN JOSE, COSTA RICA, 1976. Documentos. Compilado por Richard A. Ogle. San José, Costa Rica, IICA, PIADIC, 1976. 44 p. (PIADIC No. 017).

178. REUNION DEL COMITE COORDINADOR INTERNO DEL PROGRAMA DE INFORMACION AGROPECUARIA DEL ISTMO CENTROAMERICANO, 6a., SAN JOSE, COSTA RICA, 1976. Acta preliminar de la sexta reunión del Comité Coordinador Interno del Programa de Información Agropecuaria del Istmo Centroamericano. San José, Costa Rica, IICA, PIADIC, 1976. 7 p.

179. REUNION DEL COMITE REGIONAL INTERINSTITUCIONAL ASESOR DEL PROGRAMA DE INFORMACION AGROPECUARIA DEL ISTMO CENTROAMERICANO, 1a., SAN JOSE, COSTA RICA, 1975. Acta. San José, Costa Rica, IICA, PIADIC, 1975. 8 p. (PIADIC No. 002).

180. REUNION PARA SELECCIONAR ESTUDIOS ESPECIALIES DEL PIADIC PARA 1976/77, GUATEMALA, 1976. Informe de la reunión. Guatemala, IICA, PIADIC, 1977. p. irr.

181. REUNION SOBRE LA EVALUACION DE LA ADMINISTRACION Y ESTRUCTURA OPERACIONAL DEL PIADIC, TEGUCIGALPA, HONDURAS, 1981. IICA. Ponencias, Resultados y Recomendaciones de Eventos Técnicos no. 242. 1981. 96 p.

182. REUNION SOBRE LAS OPERACIONES DEL PROGRAMA DE INFORMACION AGROPECUARIA DEL ISTMO CENTROAMERICANO, 1a., SAN JOSE, COSTA RICA, 1975. Acta. San José, Costa Rica, IICA, PIADIC, 1975. 18 p. (PIADIC No. 001).

183. REUNIONES DE LOS GRUPOS REGIONALES ASESORES DEL PIADIC, SAN SALVADOR, 1977. San Salvador, El Salvador, IICA, PIADIC, 1977. 11 p.

184. ROSALES, F. E. Area frame probability samples; design, construction and use of area frames for survey sampling. San José, Costa Rica, IICA, PIADIC, 1981. 48 p. (PIADIC Information Management Series no. 2).

185. _____. Perfiles de áreas rurales. IICA, PIADIC, Documentación e Información Agrícola no. 110. 1982. 48 p. (Apéndices).

186. _____. Rural area profiling; management information for resource development. San José, Costa Rica, IICA, PIADIC, 1981. 34 p. (PIADIC Information Management Series no. 1).

187. RULFO, V. F. Algunas notas sobre presentación de resultados. San José, Costa Rica, IICA, PIADIC, 1976. 23 p. (PIADIC No. 006).

188. SAMAYOA UREA, O. A. El estado actual del sistema nacional de información agropecuaria y prioridades para la elaboración del plan. Guatemala, IICA, PIADIC, 1976. 37 p.

189. SECRETARIA PERMANENTE DEL TRATADO GENERAL DE INTEGRACION ECONOMICA CENTROAMERICANA. Modelo econométrico centroamericano; proyecto SIECA/BID. San José, Costa Rica, IICA, PIADIC, s.f. 302 p.

190. SEMINARIO REGIONAL SOBRE PERFILES DE AREAS RURALES, SAN JOSE, COSTA RICA, 1981. IICA. Ponencias, Resultados y Recomendaciones de Eventos Técnicos no. 238. 1981. 190 p.

191. SEMINARIO SOBRE OPERACION DE ENCUESTAS Y MANEJO DEL MARCO DE AREAS PARA AGRICULTURA, SAN JOSE, COSTA RICA, 1981. Seminario sobre operación de encuestas y manejo del marco de áreas para agricultura. IICA, PIADIC, Ponencias, Resultados y Recomendaciones de Eventos Técnicos no. 252. 1981. p. irr.

192. SEMINARIO SOBRE PREPARACION DE ALTERNATIVAS DE PRODUCCION, GRANOS BASICOS, SAN ANDRES, El SALVADOR, 1978. Preparación de alternativas de producción "granos básicos". San Andrés, El Salvador, IICA, PIADIC, 1978. 175 p.

193. SEMINARIO SOBRE PREPARACION DE ALTERNATIVAS DE PRODUCCION "MAIZ" - "GUANDU", SAN JOSE, COSTA RICA, 1978. San José, Costa Rica, IICA, PIADIC, 1978. 62 p.

194. SEMINARIO SOBRE SISTEMAS DE INFORMACION AGROPECUARIA, 1°, SAN SALVADOR, EL SALVADOR, 1977. San Salvador, El Salvador, IICA, PIADIC, 1977. 141 p.

195. TALLER REGIONAL SOBRE METODOLOGIA Y ANALISIS DE LA INFORMACION DE MERCADOS, SAN JOSE, COSTA RICA, 1977. Documentación. San José, Costa Rica, IICA, PIADIC, 1977. p. irr.

196. TALLER SOBRE PERFILES DE AREAS ESPECIFICAS Y ALTERNATIVAS DE PRODUCCION, SAN JOSE, COSTA RICA, 1979. Taller sobre perfiles de áreas específicas y alternativas de producción. San José, Costa Rica, IICA, PIADIC, 1979. p. irr.

197. TOSI JUNIOR, J. y HARTSHORN, G. Zonas de vida ecológicas de El Salvador, del Dr. L. R. Holdridge. San Salvador, El Salvador, IICA, PIADIC, 1979. 12 p.

198. TREMINIO CH., R. et al. Plan de mejoramiento de la productividad agrícola para la subregión Estelí (Nicaragua) Guatemala, IICA, PIADIC, 1979. 109 p.

199. VALLE SOTO, R. Descripción de variables, registros nos. 1/14 y 21 Guatemala, IICA, PIADIC, 1981. 42 p.

200. VASQUEZ, V. A. et al. Paquetes de información tecnológica sobre el cultivo de arroz para el municipio de Chimaltenango. San Andrés, El Salvador, IICA, PIADIC, 1978. 40 p.

201. _____. Perfil de área específica y alternativas tecnológicas San José, Costa Rica, IICA, PIADIC, 1979. 11 p.

202. VILLASUSO E., J. M. et al. Manual para el diseño de sistemas de información de mercados y pronósticos agropecuarios. San José, Costa Rica, IICA, PIADIC, 1976. 97 p. (PIADIC No. 012).

203. _____. Algunas consideraciones en cuanto a la base de datos en comercialización. San José, Costa Rica, IICA, PIADIC, 1978. 5 p.

204. _____. La demanda por información en los agricultores panameños; el caso de la información de mercados. Panamá, IICA, PIADIC, 1978. 52 p.

205. _____. et al. Plan maestro para el establecimiento del Sistema de Información Agropecuaria de Honduras (SNIAH). Tegucigalpa, IICA, PIADIC, 1978. 31 p. (PIADIC No. 00094).

206. VILLASUSO E., J. M., CASTILLO, J. y CACERES NIETO, V. Propuesta para la elaboración de un proyecto tendiente a consolidar un sistema de información de mercados y comercialización en Honduras. Tegucigalpa, Honduras, IICA, PIADIC, 1978. p. irr.

207. VIVES, L. y QUIROGA, V. Tabulación de los datos climáticos para uso agrícola; segunda aproximación. IICA. Publicación Miscelánea no. 172. 1977. 393 p.

208. WALLACE, M. Manual para el establecimiento de marcos muestrales nacionales. San José, Costa Rica, IICA, PIADIC, 1976. 52 p. (PIADIC No. 010).

209. YBARRA ROJAS, A. Cuestionario modelo para el banco de preguntas formuladas de las encuestas de perfil de área para Centro América y Panamá. San José, Costa Rica, IICA, PIADIC, 1979. 25 p.

210. _____. Cuestionario modelo propuesto a la Oficina de Planificación Sectorial Agropecuaria-OPSA del Ministerio de Agricultura y Ganadería de Costa Rica para la encuesta nacional básica para el sistema de producción agrícola. Versión preliminar. San José, Costa Rica, IICA, PIADIC, 1979. 36 p.

211. _____. Indicadores sociales y económicos de nivel de vida de la población campesina en Centro América y Panamá. Versión preliminar. San José, Costa Rica, IICA, PIADIC, 1979. 40 p'

212. _____. Propuesta de indicadores para el diagnóstico social de los perfiles de área en Centro América y Panamá. Versión preliminar. San José, Costa Rica, IICA, PIADIC, 1979. 30 p.

213. _____. Descripción de los instrumentos constitutivos del sistema integrado de indicadores sociales de nivel de vida y progreso social de las familias rurales de Centroamérica y Panamá. IICA. Documentación e Información Agrícola no. 107. 1981. 85 p.

SERIE : DOCUMENTACION E INFORMACION AGRICOLA

1. Colección de referencia de la Biblioteca Conmemorativa Orton. 2 ed. 1967.

2. Publicaciones periódicas de la Biblioteca Conmemorativa Orton. 1964.

3. Tesis de la Escuela para Graduados 1947-1968; resúmenes. 2 ed. rev. y ampl.

4. Redacción de referencias bibliográficas; normas oficiales del IICA. 2 ed. 1972.

5. Directorio de bibliotecas agrícolas en América Latina. 1964.

6. Catálogo de publicaciones periódicas de la Biblioteca Conmemorativa Orton. 2 ed. rev. y ampl. 1970.

7. Estado actual de bibliotecas agrícolas en América del Sur; resultados de una encuesta personal. 1966.

8. Administración de bibliotecas agrícolas. 1966

9. Guía de publicaciones periódicas agrícolas de América Latina. 1966.

10. Bibliografía de bibliografías agrícolas de América Latina. 2 ed. rev. y ampl. 1969.

11. I Mesa Redonda sobre el Programa Interamericano de Desarrollo de Bibliotecas Agrícolas, Lima. 1968.

12. Contribuciones del IICA a la literatura de las ciencias agrícolas. 3 ed. rev. 1977.

13. Directorio de siglas en ciencias agrícolas. 2 ed. 1971.

14. Guía básica para bibliotecas agrícolas (ed. en portugués y español). 1969

15. II Mesa Redonda sobre el Programa Interaemricano de Desarrollo de Bibliotecas Agrícolas, Bogotá. 1969.

16. Recursos de bibliotecas agrícolas en América Latina. 1969.

17. 2000 libros en ciencias agrícolas en castellano. 1969.

18. III Mesa Redonda sobre el Programa Interamericano de Desarrollo de Bibliotecas Agrícolas, Río de Janeiro. 1969.

19. Publicaciones periódicas y seriadas de América Latina. 1971.

20. Indice Latinoamericano de tesis agrícolas. 1972.

21. Trópico americano: situación de los servicios bibliotecarios y documentación agrícola. 1972.

22. 3000 libros agrícolas en español. 1973.

23. Bibliografía sobre frijol de costa (*Vigna sinensis*). 1973.

24. Sistema Interamericano de Información para las Ciencias Agrícolas-AGRINTER: bases para su establecimiento. 1973.

25. Bibliografía sobre especies de la fauna silvestre y pesca fluvial y lacustre de América Tropical. 1973.

26. Bibliografía sobre plantas de interés económico de la región Amazónica. 1974.

27. Bibliografía sobre sistemas de agricultura tropical. 1974.

28. Bibliografías agrícolas de América Central: PANAMA. Suplemento. 1974.

29. Bibliografía sobre catastro rural en América Latina. 1974.

30. Indice Latinoamericano de tesis agrícolas. Suplemento no. 1, 1968-1972. 1974.

31. Bibliografía peruana de pastos y forrajes. 1974.

32. Bibliografías agrícolas de América Central: EL SALVADOR. 1974.

33. Ecología del trópico americano. 1974.

34. Bibliografías agrícolas de América Central: HONDURAS. 1974.

35. Bibliografía selectiva sobre reforma agraria en América Latina 1964-1972. 1974.

36. Manual para Descripción Bibliográfica. Trad. y adapt. del Manual de AGRIS. 2 ed. 1979.

37. Categorías de Materias. Trad. de las Categorías de AGRIS. 2 ed. 1979.

38. Indice de mapas de América Latina y el Caribe existentes en el IICA-CIDIA. 1975.

39. Bibliografías agrícolas de América Central: GUATEMALA. 1975.

40. Bibliografía selectiva sobre derecho y reforma agraria en América Latina, 1972-1974. 1975.

41. La mujer en el medio rural; bibliografía. 1975.

42. Bibliografía colombiana de pastos y forrajes. 1975.

43. Bibliografía sobre silvicultura y ecología forestal tropical. 1975.

44. Silvicultura de bosques tropicales; bibliografía. 1975.

45. Bibliografía internacional sobre la quinua y cañahua. 1976.

46. Bibliografía sobre camélidos sudamericanos. 1976.

47. Bibliografía sobre bovinos criollos de Latinoamérica. 1976.

48. Manual de organización, planificación y operación de los Comités Nacionales de Coordinación (PIADIC). 1976.

49. AGRINTER: origen y evolución; bibliografía anotada. 1976.

50. Bibliografía universitaria de la investigación agrícola en Perú. 1976.

51. Directrices para la selección de documentos en los Sistemas AGRINTER y AGRIS. 1976.

52. Lista de publicaciones periódicas y seriadas. 1976.

53. Bibliografía sobre formas asociativas de producción en el agro. 1977.

54. Camote, maní y soya en América Latina 1970-1975; una bibliografía parcialmente anotada. 1977.

55. Bibliografía sobre aspectos sociales de la producción agropecuaria. 1977.

56. Bibliografía selectiva sobre recursos naturales de Colombia. 1977.

57. Bibliografía colombiana sobre desarrollo rural. 1977.

58. Bibliografía selectiva sobre comercialización agrícola. 1977.

59. Bibliografía sobre reforma agraria en América Latina 1974-1976. 1977.

60. Royas del cafeto (*Hemileia spp.*) Bibliografía. Suplemento a la 3 ed. 1980.

61. Banco de datos de bibliografías agrícolas de América Latina y el Caribe: Indice acumulado. 1977.

62. Normas de enriquecimiento de títulos. 2 ed. 1980.

63. Vocabulario agrícola en español. 1978.

64. Bibliografía forestal del Perú. 1978.

65. La acción del IICA en el campo de las bibliotecas, documentación e información agrícolas: una síntesis. 1978.

66. Bibliografía sobre ciencias de la información (aportes del IICA). 1978.

67. Bibliografía sobre peste porcina africana. 1979.

68. Centro Interamericano de Documentación, Información y Comunicación Agrícola - CIDIA. 1978.

69. Bibliografía forestal de América Tropical. 1979.

70. Bibliografía selectiva sobre desarrollo rural en Venezuela. 1979.

71. Moniliasis: bibliografía. 1979.

72. Bibliografía sobre sensores remotos. 1979.

73. ISIS: manual para usuarios. 1979.

74. Bibliografía básica en desarrollo rural latinoamericano 1979.

75. Bibliografía sobre desarrollo rural en Ecuador. 1979.

76. Manual para la preparación de perfiles de área para la formulación de alternativas de producción. 1979.

77. Sistema de Información para la Investigación Agropecuaria-SINIA. 1979.

78. Participación de la mujer en el desarrollo rural. 1980

79. Biomasa y otras fuentes no convencionales de energía: Bibliografía. 1980.

80. Bibliografía sobre colonización en América Latina. 1980.

81. Análisis sobre el desarrollo del Sistema Interamericano de Información Agrícola-AGRINTER. 1980.

82. Rural women: a Caribbean bibliography with special reference to Jamaica. 1980.

83. Bibliografía Agrícola de COSTA RICA. 2 ed. rev. y actualizada. 1980.

84. Documentos producidos por el Fondo Simón Bolívar. 1980.

85. Catálogo colectivo de publicaciones periódicas existentes en bibliotecas agrícolas del Uruguay. 1980.

86. Bibliography of literature relating to research and development in the agricultural sector of Jamaica 1959-1979. 1980.

87. Cáncer de los cítricos. Bibliografía parcialmente anotada. 1980.

88. *Rhadinaphelenchus cocophilus* "Anillo rojo del cocotero"; una bibliografía parcialmente anotada. 1980.

89. Sigatoka del banano: bibliografía parcialmente anotada. 1980.

90. Mosca del Mediterráneo *Ceratitis capitata*. Bibliografía parcialmente anotada. 1980.

91. Mulher no Brasil; resumo bibliográfico. 1980.

92. Bibliografía selectiva sobre el desarrollo rural en Bolivia. 1980.

93. Bibliografía Agrícola del Uruguay 1979-1980. 1981.

94. Páginas de contenido en Medicina Veterinaria. 1981.

95. Curso corto sobre manejo de datos de investigación usando SAS. Trad. del inglés. 1981.

96. Catálogo colectivo de las publicaciones periódicas de las Bibliotecas del CIDIA. 1981.

97. Directorio de recursos humanos del Uruguay en Producción Animal. 1981.

98. Una guía del usuario a la versión 3 del programa analítico de recursos geográficos. 1981.

99. Manual de organización de la información en archivos magnéticos (Banco de Datos). Encuesta rural, Nicaragua 1980. 1981.

100. Tristeza de los cítricos. Bibliografía parcialmente anotada. 1981.

101. Manual de organización de la información en archivos magnéticos (Banco de Datos) encuesta rural Pacífico Sur, Costa Rica. 1981.

102. Aves depredadoras; bibliografía parcialmente anotada. 1981.

103. Roya y carbón de la caña de azúcar; bibliografía parcialmente anotada. 1981.

104. Bibliografía sobre desarrollo rural del Perú. 1981.

105. Directory of Directors of Animal Health. 1981.

106. Una guía del usuario para la versión 2.0 del programa creador del archivo maestro geográfico. 1981.

107. Descripción de los instrumentos constitucionales del sistema integrado de indicadores sociales de nivel de vida y progreso social en las familias rurales de Centroamérica y Panamá. 1981.

108. Biogas : una bibliografía mundial. 1981.

109. Bibliografía sobre carambola (*Averrhoa carambola* L.). 1982.

110. Perfiles de áreas rurales. 1982.

111. Bibliografía sobre café. 1982.

112. Muestras probabilísticas en marcos de área: diseño, construcción y uso de marcos de área para muestreos por encuesta. 1982.

113. La mujer rural en Paraguay. 1982.

114. Contribuciones del IICA a la literatura sobre ciencias agrícolas, 1977-1982. 1982.

115. Moho azul del tabaco (*Peronospora tabacina Adam*); bibliografía parcialmente anotada. 1982.

116. Catálogo de microfichas de los documentos agrícolas no convencionales de América Latina y el Caribe. 1982.

117. Bibliotecas depositarias de las publicaciones del IICA. 1982.

118. Bibliografía anotada sobre la mujer y la familia rural en Ecuador. 1982.

119. Desarrollo de un sistema de información geográfica del Istmo Centroamericano. 1982.

120. Bibliografía de Publicaciones del PIADIC. 1982.

CIDIA-PIADIC

BUDGET PROPOSAL AND WORK PLANS

PIADIC PROJECT

JANUARY-JUNE 30, 1981

INSTITUTO INTERAMERICANO DE CIENCIAS AGRICOLAS-OEA
DECEMBER, 1980
SAN JOSE

PIADIC

SUMMARY BUDGET PROPOSAL JAN-JUNE 1981 PIADIC

III	Local contracts	43.088
IV	Travel	20.700
V	Training	68.860
VI	National Survey	9.500
VII	Evaluation	5.000
VIII	Other Cost	45.600
TOTAL		192.748

PIADIC

SUMMARY BUDGET PROPOSAL JAN-JUNE 30/81 BY COUNTRY

	Regional	Guatemala	El Salvador	Honduras	Nicaragua	Costa Rica	Panama	Total
III Local contract	43.088	0	0	0	0	0	0	43.088
IV Travel	9.500	2.500	500	2.500	2.200	800	2.700	20.700
V Training	51.850	4.660	5.110	2.060	1.460	2.260	1.460	68.860
VI National Survey	0	500	0	0	2.000	1.000	6.000	9.500
VII Evaluation	5.000	0	0	0	0	0	0	5.000
VIII Other Cost	36.800	2.150	550	1.750	1.550	950	1.850	45.600
TOTAL	146.550	9.800	6.160	6.310	7.210	5.010	12.010	192.748

PIADIC

SUMMARY BUDGET PROPOSAL JAN-JUNE 30/81 OUTPUT I

	Regional	Guatemala	El Salvador	Honduras	Nicaragua	Costa Rica	Panama	Total
IV Travel	0	0	0	0	0	0	0	0
V Training	14.500	1.200	5.000	0	0	800	0	21.500
VI National Survey	0	0	0	0	0	0	0	0
VII Evaluation	0	0	0	0	0	0	0	0
VIII Other Cost	3.500	950	350	1.150	950	350	950	8.200
TOTAL	18.000	2.150	5.350	1.150	950	1.150	950	29.700

PIADIC

SUMMARY BUDGET PROPOSAL JAN-JUNE 30/81 OUTPUT IIA

	Regional
IV Travel	5.000
V Training	10.150
VI National Survey	0
VII Evaluation	0
VIII Other Cost	8.500
TOTAL	23.650

PIADIC

SUMMARY BUDGET PROPOSAL JAN-JUNE 30/81 OUTPUT IIB

	Regional	Guatemala	El Salvador	Honduras	Nicaragua	Costa Rica	Panama	Total
IV Travel	1.500	1.500	10	1.500	1.500	800	2.000	8.800
V Training	16.100	3.350	0	1.950	1.350	1.350	1.350	25.450
VI National Survey	0	500	0	0	2.000	1.000	6.000	9.500
VII Evaluation	0	0	0	0	0	0	0	0
VIII Other Cost	1.500	1.000	0	400	400	400	700	4.400
TOTAL	19.100	6.350	0	3.850	5.250	3.550	10.050	48.150

PIADIC

SUMMARY BUDGET PROPOSAL JAN-JUNE 30/81 OUTPUT III

	Regional	Guatemala	El Salvador	Honduras	Nicaragua	Costa Rica	Panamá	Total
IV Travel	0	1.000	500	1.000	700	0	700	3.900
V Training	0	110	110	110	110	110	110	660
VI National Survey	0	0	0	0	0	0	0	0
VII Evaluation	0	0	0	0	0	0	0	0
VIII Other Cost	0	200	200	200	200	200	200	1.200
TOTAL	0	1.300	810	1.310	1.010	310	1.010	5.760

PIADIC

SUMMARY BUDGET PROPOSAL JAN-JUNE 30/81 OUTPUT IV

		Regional
III	Local contracts	43.088
IV	Travel	3.000
V	Training	11.100
VI	National Survey	0
VII	Evaluation	5.000
VIII	Other Cost	23.300
TOTAL		85.800

PIADIC

PROGRAMMED ACTIVITIES JAN-JUNE 30/81

OUTPUT I

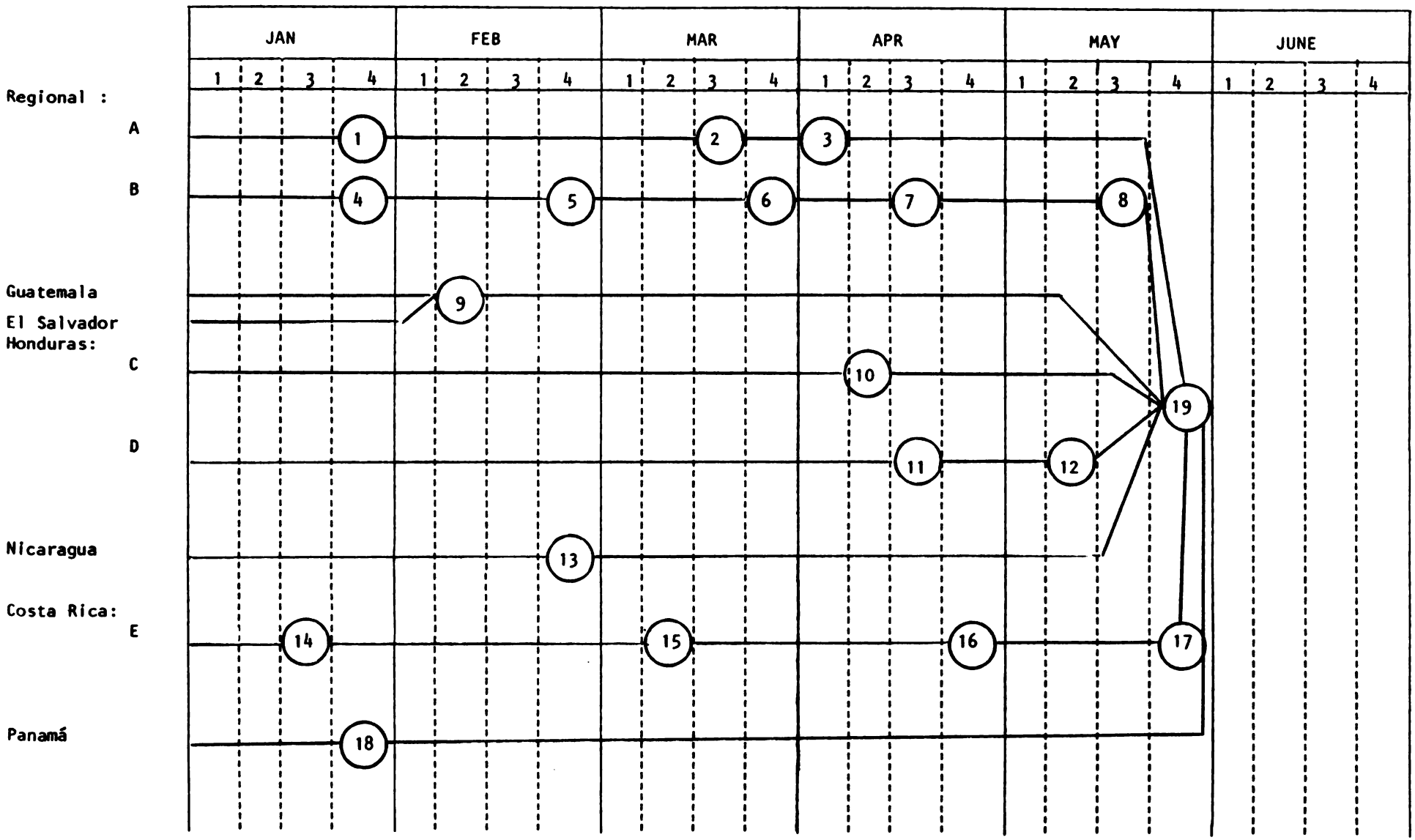

Regional: A. Survey operations seminar March 30-April 3

1. Make contacts for speakers, arrange facilities, send preliminary programme
2. Final preparation for seminar
3. Survey operation seminar March 30 - April 3

B. Publish Area Frame Manual

4. Prepare Area Frame Manual
5. Prepare Area Frame Manual
6. Prepare Area Frame Manual
7. First draft of Area Frame Manual is ready
8. Area Frame Manual Published

Guatemala: 9. Training course in basic applications of sampling and frame construction 20 participants from Guatemala, 5 participants from El Salvador.

Honduras: C. 10. Training course in objective yield procedures for corn 15-20 participants

D. Region I Survey

11. Survey preparations
12. Enumerator training

Nicaragua 13. Data User Seminar Feb. 23-27

Costa Rica E. First National Survey

14. Elaboration of questionnaire and plans
15. Assistance to survey
16. Assistance to survey
17. Enumerator training.

Panamá: 18. Data User Seminar Jan. 26-30

Regional: 19. Montie Wallace terminates PASA assignment with PIADIC project.

PIADIC

PROGRAMMED ACTIVITIES JAN-JUNE 30/81

OUTPUT IIA

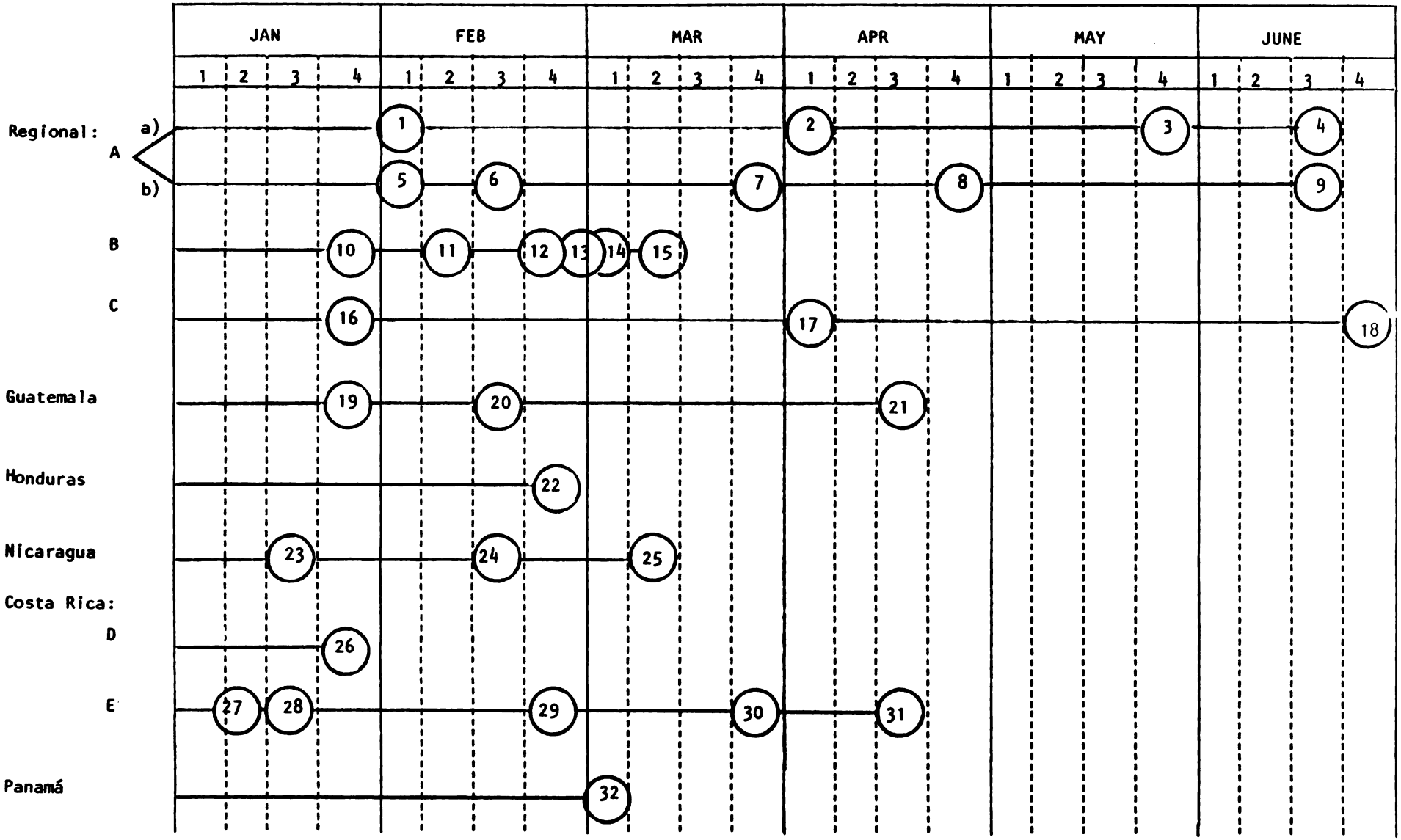

Regional: A. Manual production (Mr. Garro, Ms. Genis, Dr. Helms, Dr. Lodwick)

a) SAS Manual

1 Editing finished

2 Prepared for printing

3 Printed 300 copies

4 Distributed

b) CRIES Manual

5 Translation into Spanish completed

6 First revision completed by Dr. Lodwick

7 Editing finished

8 Prepared for printing

9 Printed 300 copies to be distributed

B. Integration of Socio-economic information with Geographic Information System (Mr. Garro, Dr. Helms, Dr. Lodwick)

10 Arrival of Dr. Lodwick for TDY

11 Arrival of Dr. Helms for TDY

12 Maps with Socio/economic data are produced

13 Analysis of socio/economic data together with natural resource data

14 Dr. Helms terminates TDY

15 Dr. Lodwick terminates TDY

C. Creation of OIRSA data base (Mr. Garro)

16 Preliminary data base has been analysed by OIRSA

17 Depending on OIRSA response and funding a complete data base for CR could be completed

18 Depending on 17 a Central American data base could be constructed.

Guatemala: Introduction of social indicators (Dr. Ybarra)

19

20 Technical assistance to CNEAG to develop social indicators

21

El Salvador: No activities

Honduras: 22 data base containing area profile information will have been created at IICA computer (Mr. Garro)

Nicaragua: 23 Computer technician from PROCAMPO arrives to with IICA computer centre to create data base (Mr. Garro)

24 Technician leaves

25 Nicaraguan data base has been created.

Costa Rica D. Elaboration of Geographical information system (Mr. Garro)

26 Presentation to SEPSA, ITCR of Geographical Information System depending on 26 further support will be planned.

E. Introduction of social indicators (Dr. Ybarra)

27 Definition of indicators to be introduced into national survey

28 Elaboration of questionnaire

29 Process 027 survey (AID) results based on indicators selected for national survey

30 Design format of tabulations - codification- dictionary

31 Analyse secondary information sources for indicators.

Panamá: 32 Presentation to RENARE, MIDA of geographical information system. (Mr. Garro, Dr. Lodwick)

PIADIC

PROGRAMMED ACTIVITIES JAN-JUNE 30/81

OUTPUT IIB

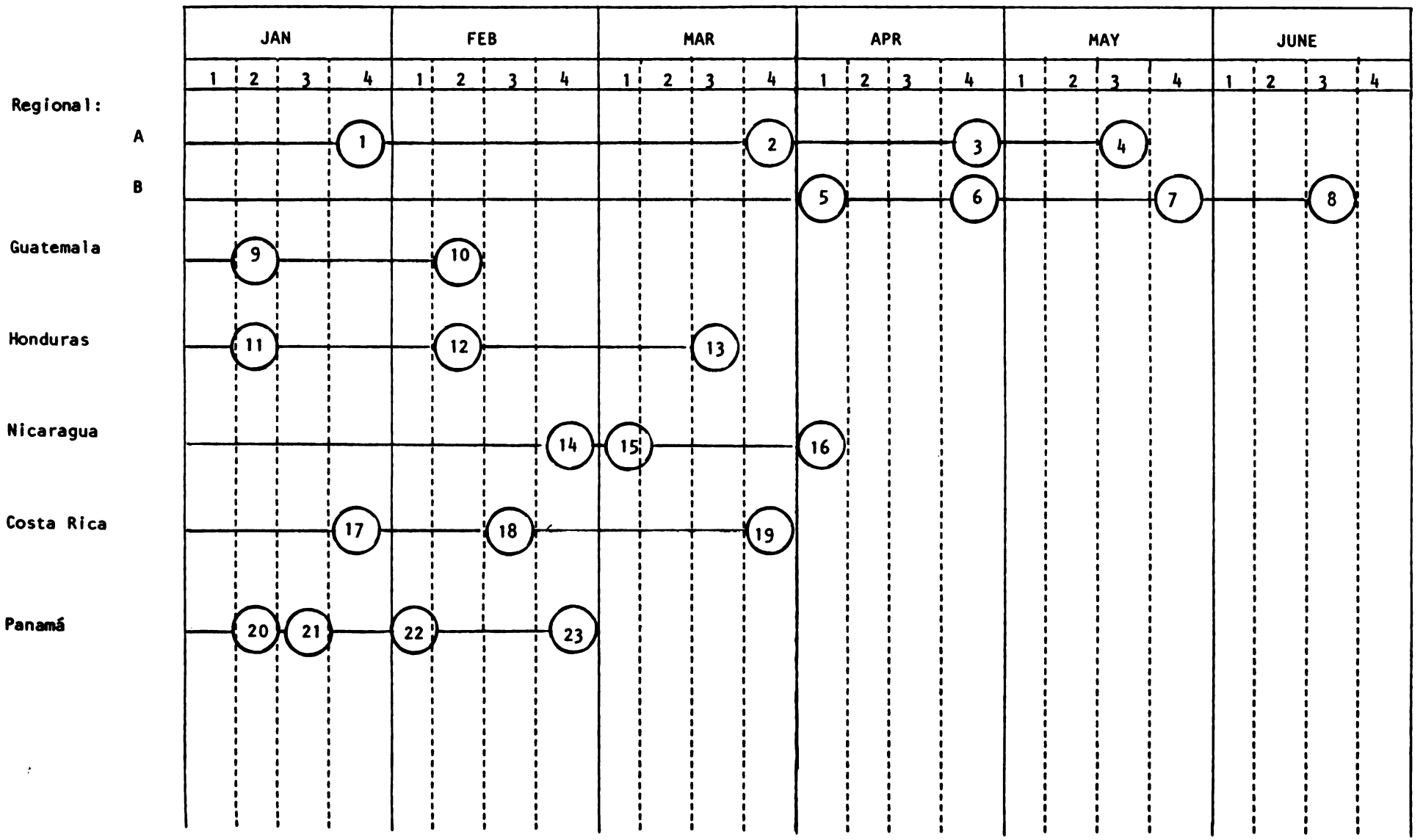

Costa Rica: Rural Area Profiling and alternative production methods (Dr. Ybarra)

17 Seminar to prepare reports

18 Final writing of reports

19 Reports have been printed and published

Panamá: Rural Area profiling and alternative production methods (Dr. Rosales)

20 Draft of report on area profiles will have been produced.

21 Draft of alternative production methods will have been produced.

22 Final writing of reports

23 Reports have been printed and published

Regional: A. Celebration of regional seminar on rural area profiling and alternative production methods (Drs. Soikes, Rosales)

1 Preparation of programme
Selection of participants
reservation of facilites

2 Follow up

3 Final arrangements made

4 Regional seminar May 18-21 (tentative) at IICA, Costa Rica

B. Production of final manual for rural area profiling and alternative production methods (Dr. Rosales)

5 First draft to be completed

6 Updated draft ready

7 Copy ready for printing

8 Manual printed

Guatemala: Rural Area Profiling and alternative production methods (Dr. Soikes)

9 Final writing of area profile and alternative production methods

10 Reports have been printed and published

El Salvador: No activities

Honduras: Rural Area Profiling and alternative production methods (V.Vásquez)

11 Seminar to prepare reports

12 Final writing of reports

13 Reports have been printed and published

Nicaragua: Rural Area Profiling and alternative production methods (Dr. Román)

14 Seminar to prepare reports

15 Final writing of reports

16 Reports have been printed and published

PIADIC

PROGRAMMED ACTIVITIES JAN-JUNE 30/81

OUTPUT III

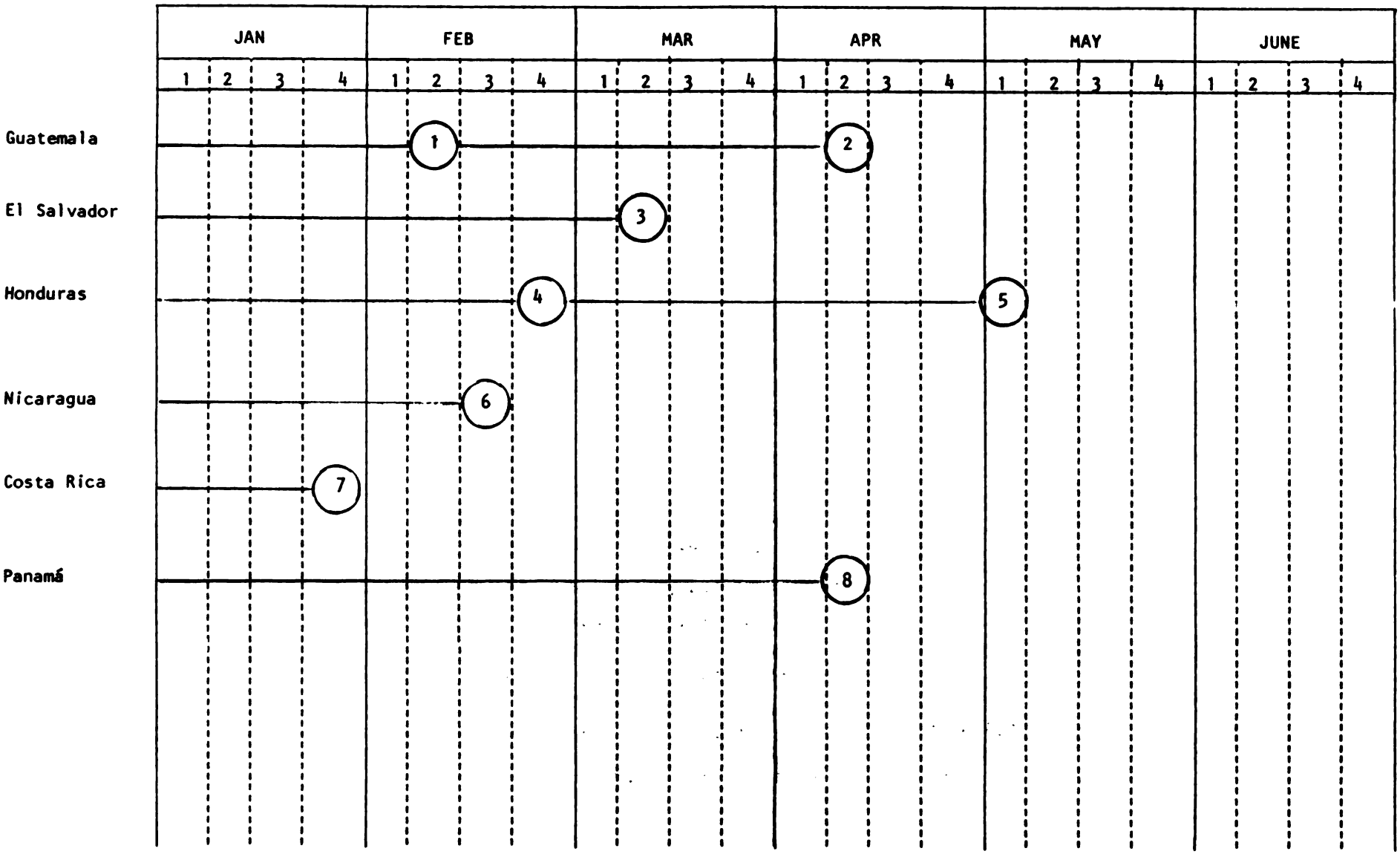

Guatemala:	1	Technical assistance to DIGESA to finalize Institutional Thesaurus if DIGESA is ready
	2	Technical assistance to CNEAG to establish national documentary information network
El Salvador:	3	Courtesy visit to Facultad de Agronomia Universidad de El Salvador
Honduras :	4	Technical assistance to CEDIA in thesaurus building
	5	Technical assistance to CEDIA in support of national network
Nicaragua:	6	Prepare programme for technical assistance to CENIT
Costa Rica:	7	Technical assistance to SEPSA in thesaurus building
Panamá :	8	Technical assistance to IDIAP in support of national network.

PIADIC

PROGRAMMED ACTIVITIES JAN-JUNE 30/81

OUTPUT IV

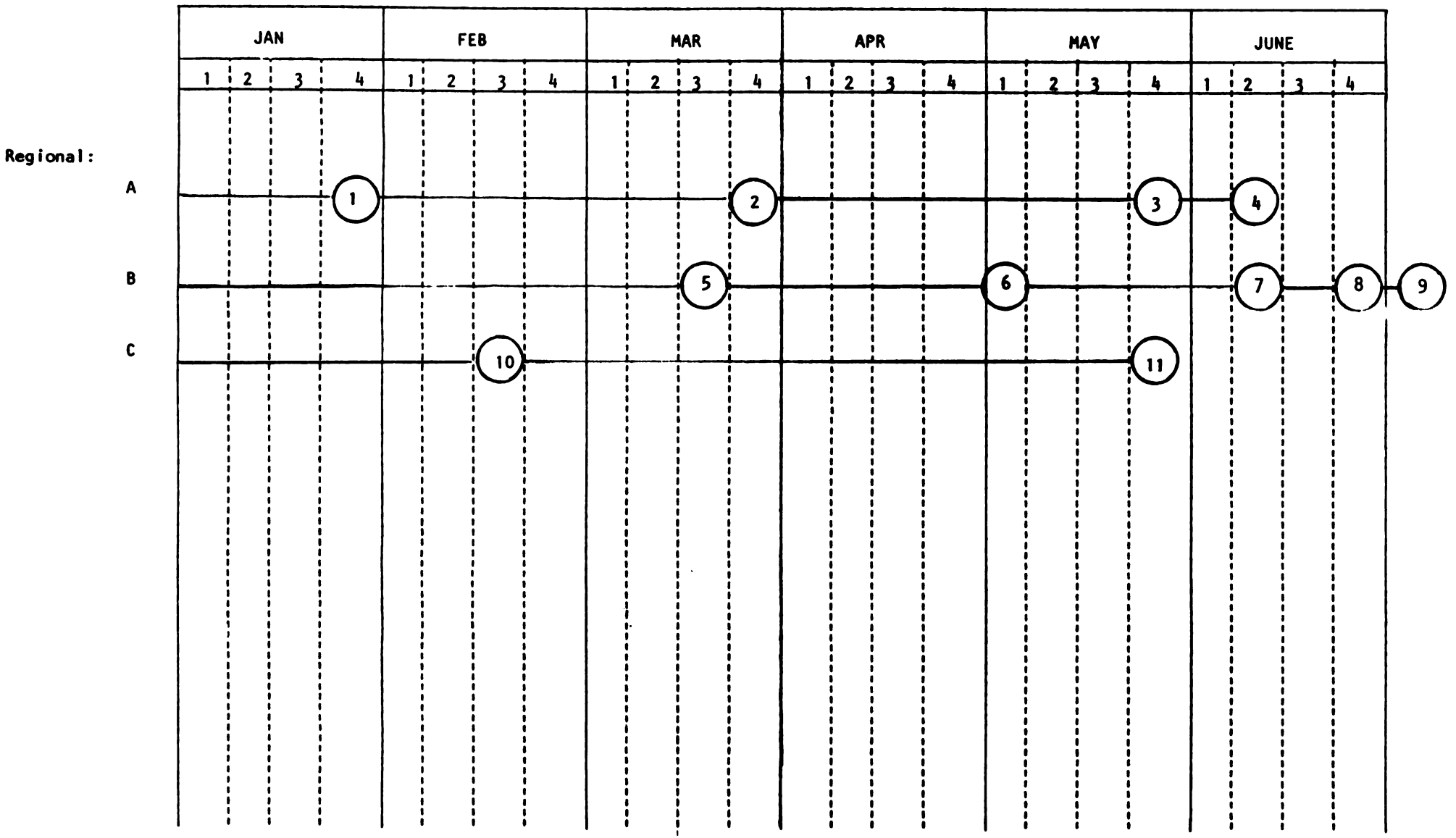

Regional:

A. Regional meeting of IICA Central American Directors Tegucigalpa. June 8-10 (Damtoft, Rosales, Soikes)

1 Preliminary programme arrangement of facilities

2 Follow up

3 Final check-up on arrangement

4 Regional meeting June 8-10

B. Report writing (Damtoft)

5 Write first quarterly report

6 Collect material for final report

7 Prepare 1st. draft of final report

8 Final report has been written

9 Final report has been submitted including financial statement

C. Regional coordination (Damtoft, Páez)

10 Presentation to AID RDO's at meeting Panama

11 Courtesy visits

Editorial IICA